OFFICINE MARIO DORIN SINCE 1918

DORIN®

INNOVATION

# CD
SERIES

2014

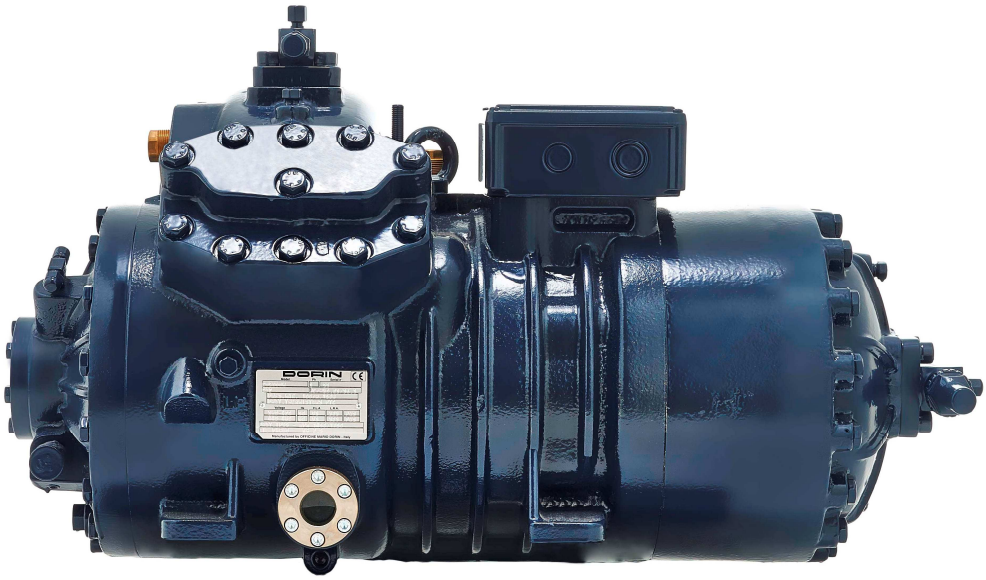

# $CO_2$ SEMI-HERMETIC COMPRESSORS

## COMPRESSORI SEMIERMETICI $CO_2$
## COMPRESSEURS SEMI-HERMETIQUES $CO_2$
## HALBHERMETISCHE $CO_2$ VERDICHTER

| | | |
|---|---|---|
| ☐ | Introduzione / Introduction / Introduction / Einführung | 3 |
| ☐ | Caratteristiche tecniche / Technical data / Caracteristiques techniques / Technische merkmale | 4 |
| ☐ | Max corrente di funzionam. / Max operating current / Max intensité de fonctionn. / Max Betriebsstrom | 5 |
| ☐ | Corrente a rotore bloccato / Locked rotor current / Courant a rotor bloqué / Anlaufstrom | 5 |
| ☐ | Limiti d'applicazione / Application limits / Champs d'application / Einsatzgrenzen | 6 |
| ☐ | Accessori / Accessories / Accessoires / Zubehör | 8 |
| ☐ | Prestazioni / Performances Data / Données de puissance / Leistungswerte | 9 |
| ☐ | Ingombri / Overall dimensions / Encombrements / Abmessungen | 20 |


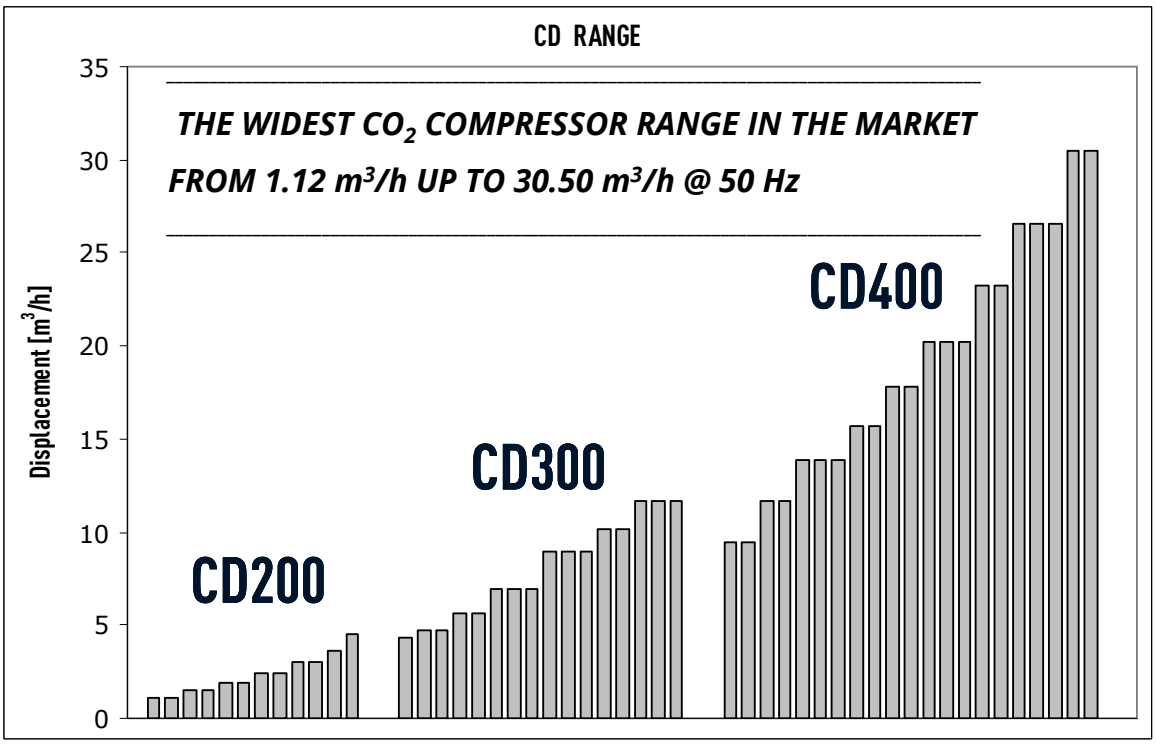


## $CO_2$ SINGLE STAGE TRANSCRITICAL COMPRESSORS

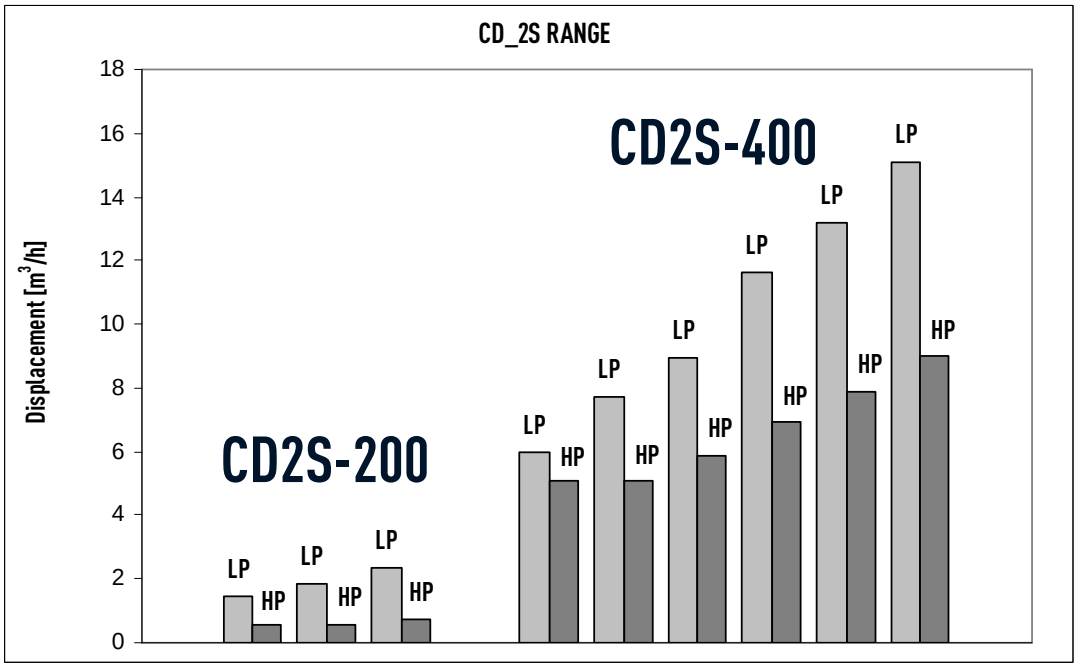


## $CO_2$ TWO STAGE TRANSCRITICAL COMPRESSORS

member of:
ASERCOM
www.asercom.org

## LA GAMMA CD

In considerazione delle condizioni di lavoro estremamente gravose cui si trova a lavorare un compressore per anidride carbonica in ciclo transcritico, è stato deciso di sviluppare una piattaforma di macchina completamente nuova invece di sfruttare e modificare il design di un compressore esistente. La progettazione di questi compressori è stata effettuata tramite i più moderni elementi di calcolo come metodi agli elementi finiti e modellazione solida.
Particolare attenzione è stata posta ai fenomeni di scambio termico tra la parte di alta e bassa pressione del compressore; ciò ha portato all'adozione di un design innovativo che ottimizza l'efficienza della macchina.
Inoltre, per coprire le esigenze impiantistiche imposte dal mercato, le pressioni di progetto sono estremamente elevate:

• PSs = 100 bar
• PS = 150 bar

Di seguito la nomenclatura dei compressori:

## CD RANGE

Considering the operating conditions of a transcritical $CO_2$ compressor, it has been decided to develop a completely new compressor platform, without trying to modify a standard HFCs compressor. The design has been developed using the most modern solid modellation codes, like, for instance, FEM analysis. Particular attention has been given to heat transfert phenomena between compressor HP and LP side. This led to the introduction of an innovative compressor design which permits extremely high COP values.

Furthermore, to cope with the very challanging market requests, high desing pressure values have been choosen, e.g.:

• PSs = 100 bar
• PS = 150 bar

Here follows compressors designation type:

## LA GAMME CD

En considération des conditions de travail extrêmement lourdes auxquelles est soumis un compresseur pour $CO_2$ en cycle transcritique, nous avons décidé de concevoir une plateforme de machine complètement nouvelle au lieu de modifier le design d'un compresseur existant. La conception de ces compresseurs a été effectuée utilisant les éléments de calcul les plus avancés, tels que la méthode des éléments finis et la modélisation tridimensionnelle.
Notamment, une grande attention a été consacrée aux phénomènes d'échange thermique entre la partie de haute et de basse pression du compresseur ; cela nous a fait choisir un design novateur, optimisant l'efficacité de la machine.
De plus, pour respecter les caractéristiques de l'installation que le marché impose, les pressions prévues par le projet sont très élevées :

• PSs = 100 bar
• PS = 150 bar

Vous trouvez ci-dessous la nomenclature des compresseurs :

## DIE CD-BAUREIHE

Angesichts der extrem harten Einsatzbedingungen, denen ein Verichter bei trasnkritischen $CO_2$-Bedingungen ausgesetzt ist hat man entschieden, eine völlig neue Verdichterplattform zu entwickeln und nicht die Standard HFC-Verdichter zu modifizieren. Die Konstruktion dieser Verdichter erfolgte unter Verwendung der modernsten Methoden, wie z.B. von Finite-Elemente-Methodik.
Besonderes Augenmerk wurde auf das Phänomen des Wärmeaustausches zwischen dem Hoch-und Niederdruck des Verdichters gelegt, was zu einem innovativen Design geführt hat, welches auch die Effizienz der Maschine optimiert.

Darüber hinaus wurden sehr hohe Drucklagen verwirklicht, um den sehr hohen Systemanforderungen zu genügen:

• PSs = 100 bar
• PS = 150 bar

Im Folgenden ist die Nomenklatursystematik der Verdichter aufgeführt:

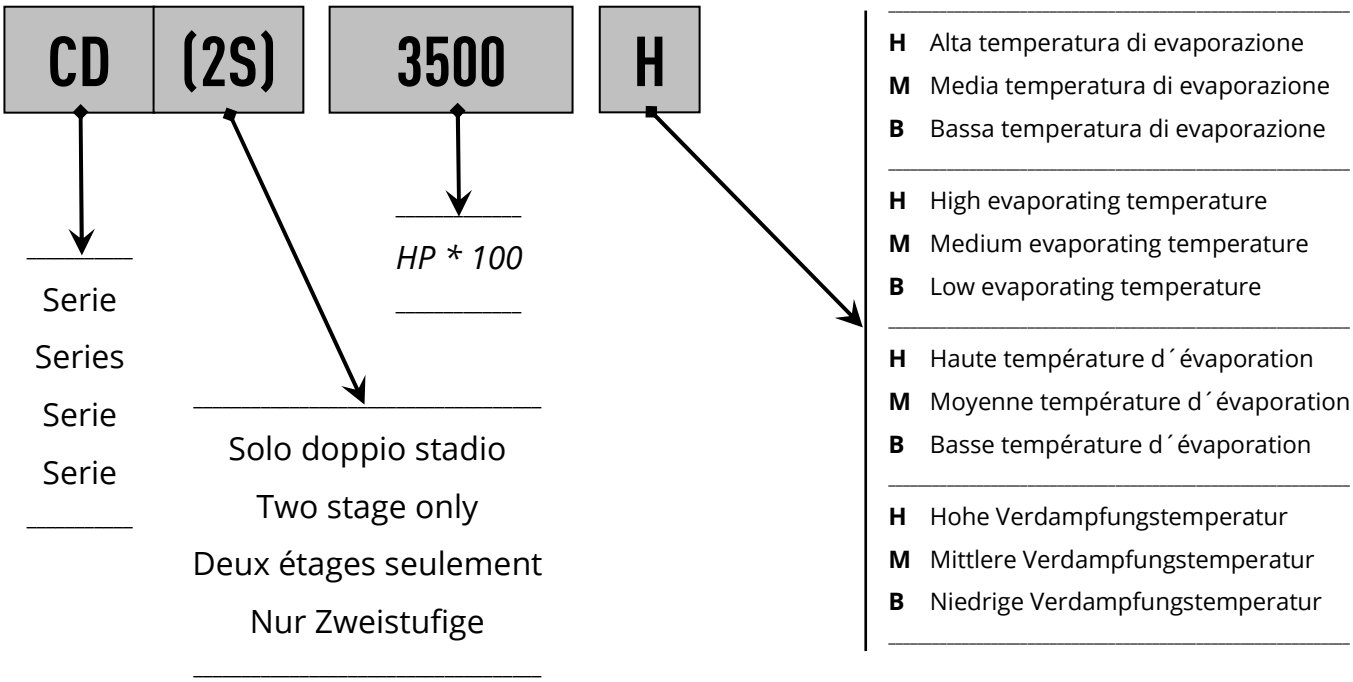

| Serie Range Serie Serie | Modello Model Modèle Typ | Cilindri Cylinders Cylindres Zylinder | Volume Spost. Displacement Volume bal. Fördervolumen [m³/h] @ 50 Hz | HP | RPM @ 50 Hz | Aspirazione Suction Aspiration Saugventil | | Scarico Discharge Refoulement Druckventil | | Peso netto Net weight Poids net Nettogewicht [kg] | Carica olio Oil charge Charge huile Ölfüllung [kg] |
|---|---|---|---|---|---|---|---|---|---|---|---|
| | | | | | | socket welding [mm] | butt welding [mm] | socket welding [mm] | butt welding [mm] | | |
| CD200 | CD 150M | 2 | 1,12 | 1,5 | 1450 | 10 | 14 | 10 | 14 | 71 | 1,3 |
| | CD 180H | 2 | 1,12 | 1,8 | 1450 | 10 | 14 | 10 | 14 | 72 | 1,3 |
| | CD 180M | 2 | 1,46 | 1,8 | 1450 | 10 | 14 | 10 | 14 | 73 | 1,3 |
| | CD 300H | 2 | 1,46 | 3,0 | 1450 | 10 | 14 | 10 | 14 | 73 | 1,3 |
| | CD 300M | 2 | 1,88 | 3,0 | 1450 | 10 | 14 | 10 | 14 | 73 | 1,3 |
| | CD 350H | 2 | 1,88 | 3,5 | 1450 | 10 | 14 | 10 | 14 | 76 | 1,3 |
| | CD 350M | 2 | 2,39 | 3,5 | 1450 | 10 | 14 | 10 | 14 | 76 | 1,3 |
| | CD 360H | 2 | 2,39 | 3,8 | 1450 | 10 | 14 | 10 | 14 | 78 | 1,3 |
| | CD 360M | 2 | 3,00 | 3,6 | 1450 | 10 | 14 | 10 | 14 | 77 | 1,3 |
| | CD 380H | 2 | 3,00 | 3,8 | 1450 | 10 | 14 | 10 | 14 | 77 | 1,3 |
| CD300 | CD 700H | 2 | 4,34 | 7,0 | 1450 | 22 | 28 | 16 | 20 | 135 | 2,5 |
| | CD 700M | 2 | 4,74 | 7,0 | 1450 | 22 | 28 | 16 | 20 | 135 | 2,5 |
| | CD 750H | 2 | 4,74 | 7,5 | 1450 | 22 | 28 | 16 | 20 | 139 | 2,5 |
| | CD 750M | 2 | 5,61 | 7,5 | 1450 | 22 | 28 | 16 | 20 | 139 | 2,5 |
| | CD 1000H | 2 | 5,61 | 10 | 1450 | 22 | 28 | 16 | 20 | 145 | 2,5 |
| | CD 750B | 2 | 6,92 | 7,5 | 1450 | 22 | 28 | 16 | 20 | 139 | 2,5 |
| | CD 1000M | 2 | 6,92 | 10 | 1450 | 22 | 28 | 16 | 20 | 145 | 2,5 |
| | CD 1200H | 2 | 6,92 | 12 | 1450 | 22 | 28 | 16 | 20 | 146 | 2,5 |
| | CD 800B | 2 | 8,92 | 7,5 | 1450 | 22 | 28 | 16 | 20 | 138 | 2,5 |
| | CD 1100M | 2 | 8,92 | 10 | 1450 | 22 | 28 | 16 | 20 | 144 | 2,5 |
| | CD 1300H | 2 | 8,92 | 12 | 1450 | 22 | 28 | 16 | 20 | 148 | 2,5 |
| | CD 1300M | 2 | 10,12 | 12 | 1450 | 22 | 28 | 16 | 20 | 148 | 2,5 |
| | CD 1500H | 2 | 10,12 | 15 | 1450 | 22 | 28 | 16 | 20 | 146 | 2,5 |
| | CD 1000B | 2 | 11,62 | 10 | 1450 | 22 | 28 | 16 | 20 | 145 | 2,5 |
| | CD 1400M | 2 | 11,62 | 15 | 1450 | 22 | 28 | 16 | 20 | 146 | 2,5 |
| | CD 1900H | 2 | 11,62 | 20 | 1450 | 22 | 28 | 16 | 20 | 147 | 2,5 |
| CD400 | CD 1200M | 4 | 9,48 | 12 | 1450 | 22 | 28 | 22 | 28 | 164 | 2,5 |
| | CD 1400H | 4 | 9,48 | 15 | 1450 | 22 | 28 | 22 | 28 | 164 | 2,5 |
| | CD 1500M | 4 | 11,69 | 15 | 1450 | 22 | 28 | 22 | 28 | 164 | 2,5 |
| | CD 2000H | 4 | 11,69 | 20 | 1450 | 22 | 28 | 22 | 28 | 164 | 2,5 |
| | CD 1200B | 4 | 13,84 | 12 | 1450 | 22 | 28 | 22 | 28 | 164 | 2,5 |
| | CD 2000M | 4 | 13,84 | 20 | 1450 | 22 | 28 | 22 | 28 | 164 | 2,5 |
| | CD 2400H | 4 | 13,84 | 25 | 1450 | 22 | 28 | 22 | 28 | 168 | 2,5 |
| | CD 1500B | 4 | 15,72 | 15 | 1450 | 22 | 28 | 22 | 28 | 164 | 2,5 |
| | CD 2500H | 4 | 15,72 | 25 | 1450 | 22 | 28 | 22 | 28 | 168 | 2,5 |
| | CD 2500M | 4 | 17,84 | 25 | 1450 | 22 | 28 | 22 | 28 | 172 | 2,5 |
| | CD 3000H | 4 | 17,84 | 30 | 1450 | 22 | 28 | 22 | 28 | 178 | 2,5 |
| | CD 2000B | 4 | 20,25 | 20 | 1450 | 22 | 28 | 22 | 28 | 168 | 2,5 |
| | CD 3000M | 4 | 20,25 | 30 | 1450 | 22 | 28 | 22 | 28 | 178 | 2,5 |
| | CD 3400H | 4 | 20,25 | 35 | 1450 | 22 | 28 | 22 | 28 | 187 | 2,5 |
| | CD 2500B | 4 | 23,25 | 25 | 1450 | 22 | 28 | 22 | 28 | 172 | 2,5 |
| | CD 3500H | 4 | 23,25 | 35 | 1450 | 22 | 28 | 22 | 28 | 187 | 2,5 |
| | CD 3000B | 4 | 26,57 | 30 | 1450 | 22 | 28 | 22 | 28 | 178 | 2,5 |
| | CD 3500M | 4 | 26,57 | 35 | 1450 | 22 | 28 | 22 | 28 | 187 | 2,5 |
| | CD 4000H | 4 | 26,57 | 40 | 1450 | 22 | 28 | 22 | 28 | 199 | 2,5 |
| | CD 3500B | 4 | 30,23 | 40 | 1450 | 28 | 35 | 22 | 28 | 199 | 2,5 |
| | CD 5000M | 4 | 30,23 | 50 | 1450 | 28 | 35 | 22 | 28 | 202 | 2,5 |

| Serie<br>Range<br>Serie<br>Serie | Modello<br>Model<br>Modèle<br>Typ | Max corrente di funzionamento / Max operating current<br>Max intensité de fonctionnement / Max Betriebsstrom<br>V / ph / Hz<br>[A] | | | | | | | | | Corrente a rotore bloccato / Locked rotor current<br>Courant a rotor bloqué / Anlaufstrom<br>V / ph / Hz<br>[A] | | | | | | | | |
|---|---|---|---|---|---|---|---|---|---|---|---|---|---|---|---|---|---|---|---|
| | | **220-240 / 3 / 50<br>265-290 / 3 / 60<br>Δ** | **380-420 / 3 / 50<br>440-480 / 3 / 60<br>Y** | 208-230 / 3 / 60<br>Δ | 360-400 / 3 / 60<br>Y | **380-420 / 3 / 50<br>440-480 / 3 / 60<br>PWS** | 220-240 / 3 / 50<br>PWS | 208-230 / 3 / 60<br>PWS | 360-400 / 3 / 60<br>PWS | 475-525 / 3 / 50<br>570-630 / 3 / 60 | **220-240 / 3 / 50<br>265-290 / 3 / 60<br>Δ** | **380-420 / 3 / 50<br>440-480 / 3 / 60<br>Y** | 208-230 / 3 / 60<br>Δ | 360-400 / 3 / 60<br>Y | **380-420 / 3 / 50<br>440-480 / 3 / 60<br>PWS *** | 220-240 / 3 / 50<br>PWS * | 208-230 / 3 / 60<br>PWS * | 360-400 / 3 / 60<br>PWS * | 475-525 / 3 / 50<br>570-630 / 3 / 60 |
| CD200 | CD 150M | **5,9** | **3,4** | 7,1 | 4,1 | - | - | - | - | 2,7 | **27,0** | **15,5** | 32,5 | 18,7 | - | - | - | - | 12,4 |
| | CD 180H | **7,6** | **4,4** | 9,1 | 5,3 | - | - | - | - | 3,5 | **35,0** | **20,0** | 41,5 | 24,0 | - | - | - | - | 16,0 |
| | CD 180M | **7,6** | **4,4** | 9,1 | 5,3 | - | - | - | - | 3,5 | **35,0** | **20,0** | 41,5 | 24,0 | - | - | - | - | 16,0 |
| | CD 300H | **10,4** | **6,0** | 12,5 | 7,2 | - | - | - | - | 4,8 | **42,0** | **24,5** | 51 | 29,5 | - | - | - | - | 19,6 |
| | CD 300M | **10,4** | **6,0** | 12,5 | 7,2 | - | - | - | - | 4,8 | **42,0** | **24,5** | 51 | 29,5 | - | - | - | - | 19,6 |
| | CD 350H | **12,6** | **7,3** | 15,1 | 8,7 | - | - | - | - | 5,8 | **55** | **32,0** | 66 | 38,5 | - | - | - | - | 25,5 |
| | CD 350M | **12,6** | **7,3** | 15,1 | 8,7 | - | - | - | - | 5,8 | **55** | **32,0** | 66 | 38,5 | - | - | - | - | 25,5 |
| | CD 360H | **16,2** | **9,4** | 19,4 | 11,2 | - | - | - | - | 7,5 | **76** | **43,5** | 91 | 52 | - | - | - | - | 35,0 |
| | CD 360M | **12,9** | **7,5** | 15,5 | 8,9 | - | - | - | - | 6,0 | **59** | **34,0** | 71 | 41,0 | - | - | - | - | 27,0 |
| | CD 380H | **16,2** | **9,4** | 19,4 | 11,2 | - | - | - | - | 7,5 | **76** | **43,5** | 91 | 52 | - | - | - | - | 35,0 |
| CD300 | CD 700H | 26,0 | 15,0 | 31,0 | 18,0 | **15,0** | 26,0 | 31,0 | 18,0 | 12,0 | 144 | 83 | 172 | 100 | **83** | 144 | 172 | 100 | 66 |
| | CD 700M | 26,0 | 15,0 | 31,0 | 18,0 | **15,0** | 26,0 | 31,0 | 18,0 | 12,0 | 144 | 83 | 172 | 100 | **83** | 144 | 172 | 100 | 66 |
| | CD 750H | 34,5 | 20,0 | 41,5 | 24,0 | **20,0** | 34,5 | 41,5 | 24,0 | 16,0 | 181 | 105 | 217 | 126 | **105** | 181 | 217 | 126 | 84 |
| | CD 750M | 34,5 | 20,0 | 41,5 | 24,0 | **20,0** | 34,5 | 41,5 | 24,0 | 16,0 | 181 | 105 | 217 | 126 | **105** | 181 | 217 | 126 | 84 |
| | CD 1000H | 41,5 | 24,0 | 50 | 29,0 | **24,0** | 41,5 | 50 | 29,0 | 19,2 | 188 | 109 | 226 | 130 | **109** | 188 | 226 | 130 | 87 |
| | CD 750B | 34,5 | 20,0 | 41,5 | 24,0 | **20,0** | 34,5 | 41,5 | 24,0 | 16,0 | 181 | 105 | 217 | 126 | **105** | 181 | 217 | 126 | 84 |
| | CD 1000M | 41,5 | 24,0 | 50 | 29,0 | **24,0** | 41,5 | 50 | 29,0 | 19,2 | 188 | 109 | 226 | 130 | **109** | 188 | 226 | 130 | 87 |
| | CD 1200H | 48,5 | 28,0 | 58 | 33,5 | **28,0** | 48,5 | 58 | 33,5 | 22,5 | 233 | 135 | 280 | 162 | **135** | 233 | 280 | 162 | 108 |
| | CD 800B | 34,5 | 20,0 | 41,5 | 24,0 | **20,0** | 34,5 | 41,5 | 24,0 | 16,0 | 181 | 105 | 217 | 126 | **105** | 181 | 217 | 126 | 84 |
| | CD 1100M | 41,5 | 24,0 | 50 | 29,0 | **24,0** | 41,5 | 50 | 29,0 | 19,2 | 188 | 109 | 226 | 130 | **109** | 188 | 226 | 130 | 87 |
| | CD 1300H | 48,5 | 28,0 | 58 | 33,5 | **28,0** | 48,5 | 58 | 33,5 | 22,5 | 233 | 135 | 280 | 162 | **135** | 233 | 280 | 162 | 108 |
| | CD 1300M | 48,5 | 28,0 | 58 | 33,5 | **28,0** | 48,5 | 58 | 33,5 | 22,5 | 233 | 135 | 280 | 162 | **135** | 233 | 280 | 162 | 108 |
| | CD 1500H | 59 | 34,0 | 71 | 41,0 | **34,0** | 59 | 71 | 41,0 | 27,0 | 295 | 171 | 354 | 205 | **171** | 295 | 354 | 205 | 136 |
| | CD 1000B | 41,5 | 24,0 | 50 | 29,0 | **24,0** | 41,5 | 50 | 29,0 | 19,2 | 188 | 109 | 226 | 130 | **109** | 188 | 226 | 130 | 87 |
| | CD 1400M | 59 | 34,0 | 71 | 41,0 | **34,0** | 59 | 71 | 41,0 | 27,0 | 295 | 171 | 354 | 205 | **171** | 295 | 354 | 205 | 136 |
| | CD 1900H | 66 | 38,0 | 79 | 45,5 | **38,0** | 66 | 79 | 45,5 | 30,5 | 306 | 177 | 367 | 212 | **177** | 306 | 367 | 212 | 142 |
| CD400 | CD 1200M | 48,5 | 28,0 | 58 | 33,5 | **28,0** | 48,5 | 58 | 33,5 | 22,5 | 233 | 135 | 280 | 162 | **135** | 233 | 280 | 162 | 108 |
| | CD 1400H | 59 | 34,0 | 71 | 41,0 | **34,0** | 59 | 71 | 41,0 | 27,0 | 295 | 171 | 354 | 205 | **171** | 295 | 354 | 205 | 136 |
| | CD 1500M | 59 | 34,0 | 71 | 41,0 | **34,0** | 59 | 71 | 41,0 | 27,0 | 295 | 171 | 354 | 205 | **171** | 295 | 354 | 205 | 136 |
| | CD 2000H | 66 | 38,0 | 79 | 45,5 | **38,0** | 66 | 79 | 45,5 | 30,5 | 306 | 177 | 367 | 212 | **177** | 306 | 367 | 212 | 142 |
| | CD 1200B | 48,5 | 28,0 | 58 | 33,5 | **28,0** | 48,5 | 58 | 33,5 | 22,5 | 233 | 135 | 280 | 162 | **135** | 233 | 280 | 162 | 108 |
| | CD 2000M | 66 | 38,0 | 79 | 45,5 | **38,0** | 66 | 79 | 45,5 | 30,5 | 306 | 177 | 367 | 212 | **177** | 306 | 367 | 212 | 142 |
| | CD 2400H | 78 | 45,0 | 93 | 54 | **45,0** | 78 | 93 | 54 | 36,0 | 351 | 203 | 421 | 244 | **203** | 351 | 421 | 244 | 162 |
| | CD 1500B | 59 | 34,0 | 71 | 41,0 | **34,0** | 59 | 71 | 41,0 | 27,0 | 295 | 171 | 354 | 205 | **171** | 295 | 354 | 205 | 136 |
| | CD 2500H | 78 | 45,0 | 93 | 54 | **45,0** | 78 | 93 | 54 | 36,0 | 351 | 203 | 421 | 244 | **203** | 351 | 421 | 244 | 162 |
| | CD 2500M | 78 | 45,0 | 93 | 54 | **45,0** | 78 | 93 | 54 | 36,0 | 351 | 203 | 421 | 244 | **203** | 351 | 421 | 244 | 162 |
| | CD 3000H | 97 | 56 | 116 | 67 | **56** | 97 | 116 | 67 | 45,0 | 424 | 245 | 509 | 294 | **245** | 424 | 509 | 294 | 196 |
| | CD 2000B | 66 | 38,0 | 79 | 45,5 | **38,0** | 66 | 79 | 45,5 | 30,5 | 306 | 177 | 367 | 212 | **177** | 306 | 367 | 212 | 142 |
| | CD 3000M | 97 | 56 | 116 | 67 | **56** | 97 | 116 | 67 | 45,0 | 424 | 245 | 509 | 294 | **245** | 424 | 509 | 294 | 196 |
| | CD 3400H | 130 | 75 | 156 | 90 | **75** | 130 | 156 | 90 | 60 | 450 | 260 | 540 | 312 | **260** | 450 | 540 | 312 | 208 |
| | CD 2500B | 78 | 45,0 | 93 | 54 | **45,0** | 78 | 93 | 54 | 36,0 | 351 | 203 | 421 | 244 | **203** | 351 | 421 | 244 | 162 |
| | CD 3500H | 130 | 75 | 156 | 90 | **75** | 130 | 156 | 90 | 60 | 450 | 260 | 540 | 312 | **260** | 450 | 540 | 312 | 208 |
| | CD 3000B | 97 | 56 | 116 | 67 | **56** | 97 | 116 | 67 | 45,0 | 424 | 245 | 509 | 294 | **245** | 424 | 509 | 294 | 196 |
| | CD 3500M | 130 | 75 | 156 | 90 | **75** | 130 | 156 | 90 | 60 | 450 | 260 | 540 | 312 | **260** | 450 | 540 | 312 | 208 |
| | CD 4000H | 139 | 80 | 166 | 96 | **80** | 139 | 166 | 96 | 64 | 502 | 290 | 602 | 348 | **290** | 502 | 602 | 348 | 232 |
| | CD 3500B | 130 | 75 | 156 | 90 | **75** | 130 | 156 | 90 | 60 | 450 | 260 | 540 | 312 | **260** | 450 | 540 | 312 | 208 |
| | CD 5000M | 161 | 93 | 193 | 112 | **93** | 161 | 193 | 112 | 74 | 559 | 323 | 671 | 388 | **323** | 559 | 671 | 388 | 258 |

Versione motore standard in grassetto / Standard motor version in bold / Version du moteur standard en gras / Standard motor version in Fett

***** Valore per collegamento diretto / Value for direct connection / Valeur pour connexion directe / Wert für den direkten Anschluss.

| Serie Range Serie Serie | Modello Model Modèle Typ | Cilindri Cylinders Cylindres Zylinder LP + HP | Volume Spost. Displacement Volume bal. Fördervolumen [m³/h] @ 50 Hz LP + HP | HP | RPM @ 50 Hz | Aspirazione Suction Aspiration Saugventil socket welding [mm] | Aspirazione butt welding [mm] | Scarico Discharge Refoulement Druckventil socket welding [mm] | Scarico butt welding [mm] | Peso netto Net weight Poids net Nettogewicht [kg] | Carica olio Oil charge Charge huile Ölfüllung [kg] |
|---|---|---|---|---|---|---|---|---|---|---|---|
| CD2S200 | CD2S300 | 2 + 1 | 1,45 + 0,57 | 3,0 | 1450 | 10 | 14 | 10 | 14 | 75 | 1,3 |
| | CD2S350 | 2 + 1 | 1,82 + 0,57 | 3,5 | 1450 | 10 | 14 | 10 | 14 | 78 | 1,3 |
| | CD2S360 | 2 + 1 | 2,36 + 0,73 | 3,8 | 1450 | 10 | 14 | 10 | 14 | 80 | 1,3 |
| CD2S400 | CD2S1200 | 2 + 2 | 5,99 + 5,06 | 12 | 1450 | 22 | 28 | 22 | 28 | 135 | 2,5 |
| | CD2S1500 | 2 + 2 | 7,71 + 5,06 | 15 | 1450 | 22 | 28 | 22 | 28 | 167 | 2,5 |
| | CD2S2000 | 2 + 2 | 8,92 + 5,85 | 20 | 1450 | 22 | 28 | 22 | 28 | 171 | 2,5 |
| | CD2S2500 | 2 + 2 | 11,65 + 6,92 | 25 | 1450 | 22 | 28 | 22 | 28 | 175 | 2,5 |
| | CD2S3000 | 2 + 2 | 13,22 + 7,86 | 30 | 1450 | 22 | 28 | 22 | 28 | 182 | 2,5 |
| | CD2S3500 | 2 + 2 | 15,11 + 8,98 | 35 | 1450 | 22 | 28 | 22 | 28 | 191 | 2,5 |

| Serie Range Serie Serie | Modello Model Modèle Typ | Max corrente di funzionamento / Max operating current Max intensité de fonctionnement / Max Betriebsstrom V / ph / Hz [A] | | | | | | | | | Corrente a rotore bloccato / Locked rotor current Courant a rotor bloqué / Anlaufstrom V / ph / Hz [A] | | | | | | | | |
|---|---|---|---|---|---|---|---|---|---|---|---|---|---|---|---|---|---|---|---|
| | | **220-240 / 3 / 50 265-290 / 3 / 60 Δ** | **380-420 / 3 / 50 440-480 / 3 / 60 Y** | 208-230 / 3 / 60 Δ | 360-400 / 3 / 60 Y | **380-420 / 3 / 50 440-480 / 3 / 60 PWS** | 220-240 / 3 / 50 PWS | 208-230 / 3 / 60 PWS | 360-400 / 3 / 60 PWS | 475-525 / 3 / 50 570-630 / 3 / 60 | **220-240 / 3 / 50 265-290 / 3 / 60 Δ** | **380-420 / 3 / 50 440-480 / 3 / 60 Y** | 208-230 / 3 / 60 Δ | 360-400 / 3 / 60 Y | **380-420 / 3 / 50 440-480 / 3 / 60 PWS *** | 220-240 / 3 / 50 PWS * | 208-230 / 3 / 60 PWS * | 360-400 / 3 / 60 PWS * | 475-525 / 3 / 50 570-630 / 3 / 60 |
| CD2S200 | CD2S300 | **10,4** | **6,0** | 12,5 | 7,2 | - | - | - | - | 4,8 | **42,0** | **24,5** | 51 | 29,5 | - | - | - | - | 19,6 |
| | CD2S350 | **12,6** | **7,3** | 15,1 | 8,7 | - | - | - | - | 5,8 | **55** | **32,0** | 66 | 38,5 | - | - | - | - | 25,5 |
| | CD2S360 | **12,9** | **7,5** | 15,5 | 8,9 | - | - | - | - | 6,0 | **59** | **34,0** | 71 | 41,0 | - | - | - | - | 27,0 |
| CD2S400 | CD2S1200 | 48 | 28,0 | 58 | 33,5 | **28,0** | 48 | 58 | 33,5 | 22,5 | 233 | 135 | 280 | 162 | **135** | 233 | 280 | 162 | 108 |
| | CD2S1500 | 59 | 34,0 | 71 | 41,0 | **34,0** | 59 | 71 | 41,0 | 27,0 | 295 | 171 | 354 | 205 | **171** | 295 | 354 | 205 | 136 |
| | CD2S2000 | 66 | 38,0 | 79 | 45,5 | **38,0** | 66 | 79 | 45,5 | 30,5 | 306 | 177 | 367 | 212 | **177** | 306 | 367 | 212 | 142 |
| | CD2S2500 | 78 | 45,0 | 93 | 54 | **45,0** | 78 | 93 | 54 | 36,0 | 351 | 203 | 421 | 244 | **203** | 351 | 421 | 244 | 162 |
| | CD2S3000 | 97 | 56 | 116 | 67 | **56** | 97 | 116 | 67 | 45,0 | 424 | 245 | 509 | 294 | **245** | 424 | 509 | 294 | 196 |
| | CD2S3500 | 130 | 75 | 156 | 90 | **75** | 130 | 156 | 90 | 60 | 450 | 260 | 540 | 312 | **260** | 450 | 540 | 312 | 208 |

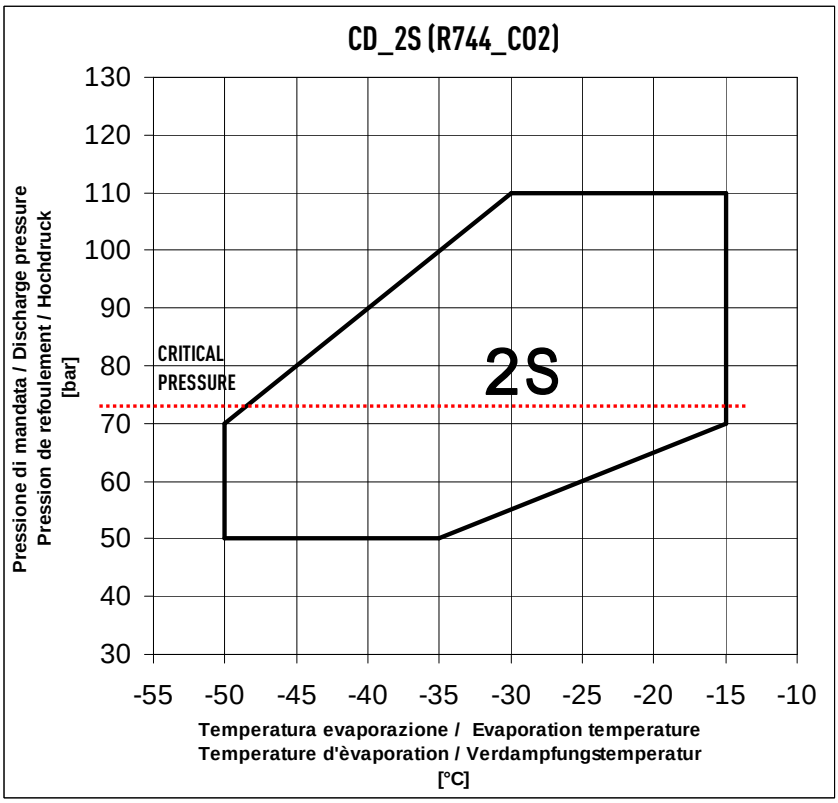


**Note per modelli CD2S (doppio stadio):**

Necessaria interrefrigerazione esterna fra mandata 1° stadio e aspirazione 2° stadio.

Le dimensioni delle connessioni relative alla pressione intermedia, sono riportate nelle dimensioni d'ingombro.

**Notes for CD2S model (two stage):**

External intercooling necessary between 1st stage discharge and 2nd stage suction.

The size of the connections related to the intermediate pressure, are shown in the overall dimensions.

**Notes pour les modèles CD2S (deux étages):**

Intercooling externe nécessaire entre le refoulement de 1er stade et l'aspiration de 2ème stade.

Les dimensions des connexions relatives à la pression intermédiaire, sont indiquées dans les dimensions d'encombrement.

**Aufzeichnungen für CD2S Modell (zweistufig):**

Externe Kühlung notwendig zwischen die Druck der 1° Stufe und Saug der 2° Stufe.

Die Größe der Verbindungen im Zusammenhang mit dem mittleren Druck, sind in den Abmessungen dargestellt.

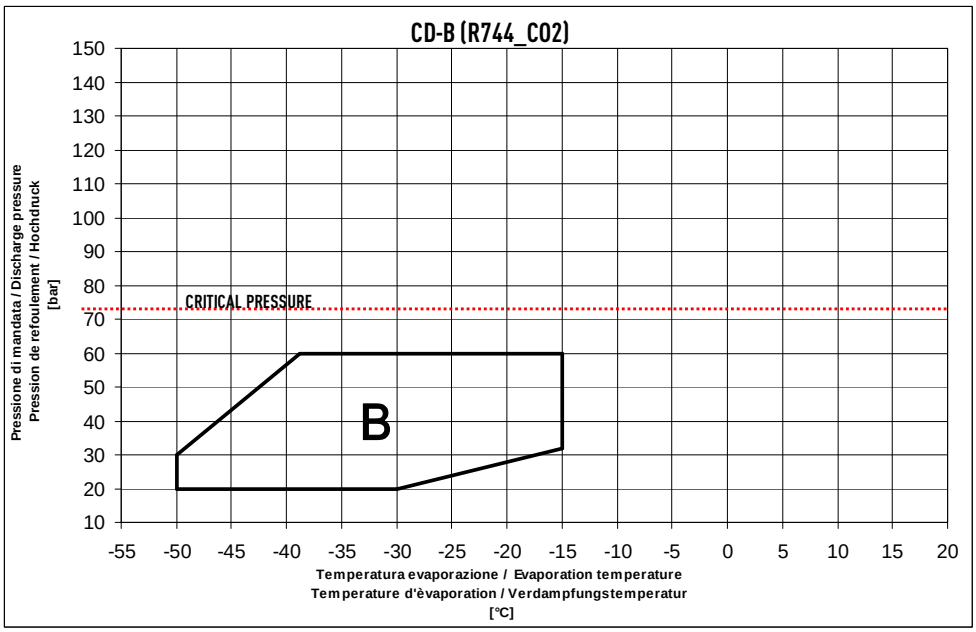


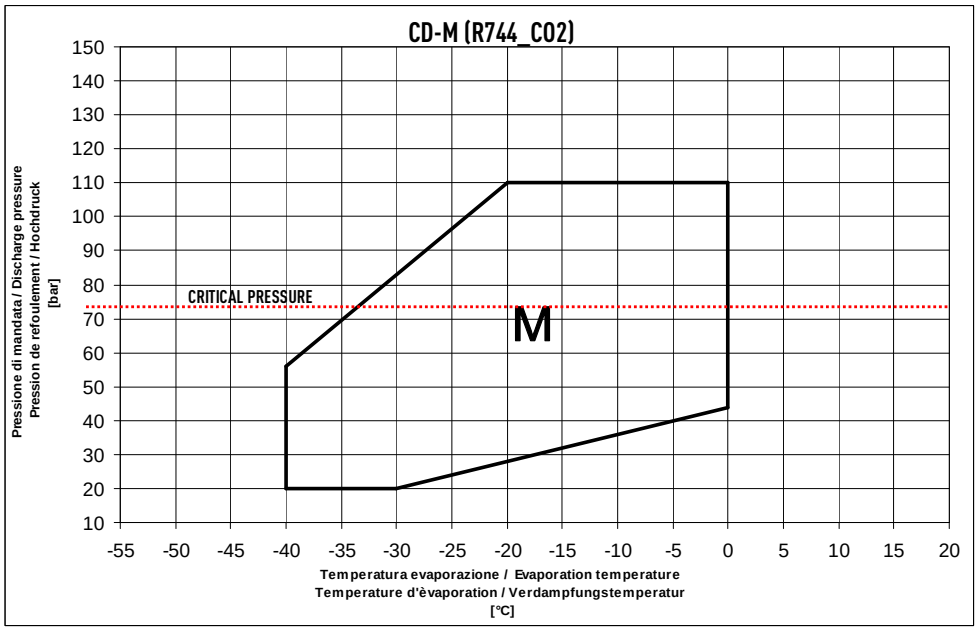


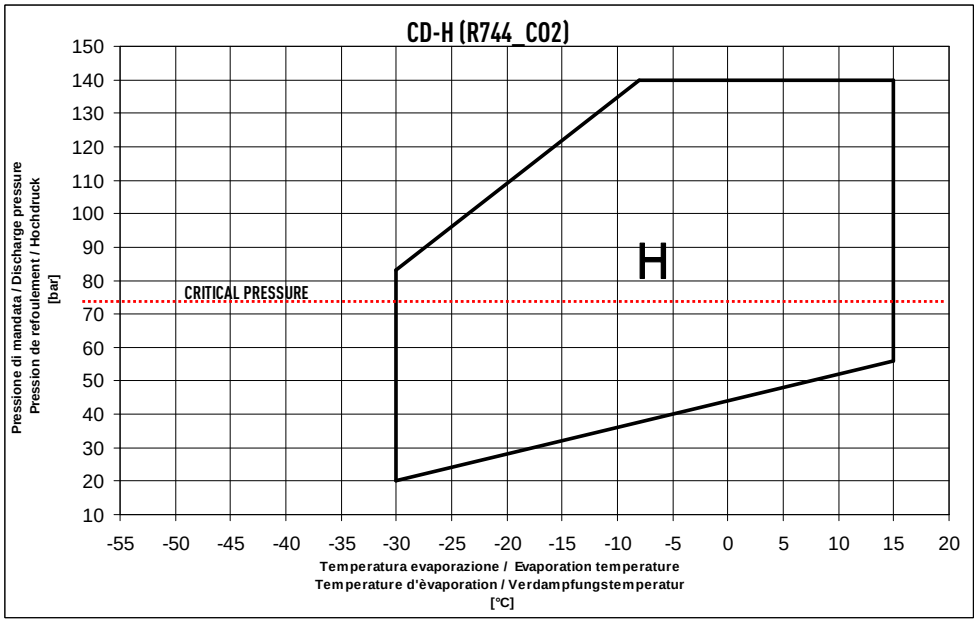


Per individuare gli esatti limiti di funzionamento di ogni singolo modello riferirsi al software di selezione Dorin

Diagrammi di applicazione dei compressori validi per surriscaldamenti in aspirazione non superiori a 10K

Per le prestazioni dei modelli CD-2S vedere software di selezione Dorin

Per le prestazioni dei modelli CD-B vedere pagina 9

Per le prestazioni dei modelli CD-M e CD-H vedere pagine 10÷19

In order to define the exact operating limits for each model, refer to Dorin selection software

Compressors application envelopes valid for superheat values lower than 10K

For the performance of the CD-2S models see Dorin selection software

For the performance of the CD-B models see page 9

For the performance of the CD-M and CD-H models see pages 10 to 19

Afin de définir les limites d'utilisation exacte de chaque modèle, voir le software de sélection Dorin

Limites d'application des compresseurs valable pour valeurs de surchauffe inférieures à 10K

Pour les données de puissance des modèles CD-2S, voir le software de sélection Dorin

Pour les données de puissance des modèles CD-B, voir page 9

Pour les données de puissance des modèles CD-M et CD-H, voir pages de 10 à 19

Die Festlegung der genauen Grenzen des Betriebsbereichs für jedes Modell finden Sie in der Dorin Software-Auswahl

Einsatzgrenzdiagramm der Verdichter für Überhitzung von weniger als 10K

Für die Leistungswerte der Modelle CD-2S, siehe in der Dorin Software-Auswahl

Für die Leistungswerte der Modelle CD-B, siehe Seite 9

Für die Leistungswerte der Modelle CD-M und CD-H, siehe Seiten 10 bis 19

| | | | | | |
|---|---|---|---|---|---|
| MT | Protezione motore<br>Motor protection<br>Protection du moteur<br>Motorschutz | REL | Modulo elettronico protezione motore<br>Motor protection electronic module<br>Module électronique protection moteur<br>Motorschutzmodul | CH | Resistenza carter<br>Crankcase heater<br>Résistance carter<br>Olsumpfheizung |
| ODPS | Pressostato differenziale olio elettronico<br>Oil differential pressure switch<br>Pressostat différentiel huile électronique<br>Öldifferenzdruckschalter elektronisch | BF | Ventilatore su testa<br>Head fan<br>Ventilation auxiliaire<br>Zylinderkopfkühlung | SALL | Sensore livello olio spia visiva<br>Oil level sensor at sight glass<br>Capteur niveau d'huile sur verre de visée<br>Ölniveausensor am Schauglaas |
| FL | Lubrificazione tramite pompa olio<br>Oil pump forced lubrication<br>Lubrification avec pompe à huile<br>Ölpumpenschmierung | LPSV-HPSV | Valvola sicurezza LP e HP<br>LP and HP pressure relief valve<br>Soupapes de sécurité pour LP et HP<br>Sicherheitsventil LP und HP | | |

| Serie<br>Range<br>Serie<br>Serie | Modello<br>Model<br>Modèle<br>Typ | MT | REL | CH | ODPS | BF | SALL | FL | LPSV-HPSV |
|---|---|---|---|---|---|---|---|---|---|
| CD 200 | CD 150M | TK | B | B | - | - | B | - | A |
| | CD 180H | TK | B | B | - | - | B | - | A |
| | CD 180M | TK | B | B | - | - | B | - | A |
| | CD 300H | TK | B | B | - | - | B | - | A |
| | CD 300M | TK | B | B | - | - | B | - | A |
| | CD 350H | TK | B | B | - | - | B | - | A |
| | CD 350M | TK | B | B | - | - | B | - | A |
| | CD 360H | TK | B | B | - | - | B | - | A |
| | CD 360M | TK | B | B | - | - | B | - | A |
| | CD 380H | TK | B | B | - | - | B | - | A |
| CD 300 | CD 700H | TE | A | B | - | B | B | - | A |
| | CD 700M | TE | A | B | - | B | B | - | A |
| | CD 750H | TE | A | B | - | B | B | - | A |
| | CD 750M | TE | A | B | - | B | B | - | A |
| | CD 1000H | TE | A | B | - | B | B | - | A |
| | CD 750B | TE | A | B | B | B | B | B * | A |
| | CD 1000M | TE | A | B | B | B | B | B * | A |
| | CD 1200H | TE | A | B | B | B | B | B * | A |
| | CD 800B | TE | A | B | A | B | B | A | A |
| | CD 1100M | TE | A | B | A | B | B | A | A |
| | CD 1300H | TE | A | B | A | B | B | A | A |
| | CD 1300M | TE | A | B | A | B | B | A | A |
| | CD 1500H | TE | A | B | A | B | B | A | A |
| | CD 1000B | TE | A | B | A | B | B | A | A |
| | CD 1400M | TE | A | B | A | B | B | A | A |
| | CD 1900H | TE | A | B | A | B | B | A | A |
| CD 400 | CD 1200M | TE | A | B | - | B | B | - | A |
| | CD 1400H | TE | A | B | - | B | B | - | A |
| | CD 1500M | TE | A | B | B | B | B | B * | A |
| | CD 2000H | TE | A | B | B | B | B | B * | A |
| | CD 1200B | TE | A | B | B | B | B | B * | A |
| | CD 2000M | TE | A | B | B | B | B | B * | A |
| | CD 2400H | TE | A | B | B | B | B | B * | A |
| | CD 1500B | TE | A | B | B | B | B | B * | A |
| | CD 2500H | TE | A | B | B | B | B | B * | A |
| | CD 2500M | TE | A | B | A | B | B | A | A |
| | CD 3000H | TE | A | B | A | B | B | A | A |
| | CD 2000B | TE | A | B | A | B | B | A | A |
| | CD 3000M | TE | A | B | A | B | B | A | A |
| | CD 3400H | TE | A | B | A | B | B | A | A |
| | CD 2500B | TE | A | B | A | B | B | A | A |
| | CD 3500H | TE | A | B | A | B | B | A | A |
| | CD 3000B | TE | A | B | A | B | B | A | A |
| | CD 3500M | TE | A | B | A | B | B | A | A |
| | CD 4000H | TE | A | B | A | B | B | A | A |
| | CD 3500B | TE | A | B | A | B | B | A | A |
| | CD 5000M | TE | A | B | A | B | B | A | A |
| CD2S200 | CD2S300 | TK | B | B | - | - | B | - | A |
| | CD2S350 | TK | B | B | - | - | B | - | A |
| | CD2S360 | TK | B | B | - | - | B | - | A |
| CD2S400 | CD2S1200 | TE | A | B | A | - | B | A | A |
| | CD2S1500 | TE | A | B | A | - | B | A | A |
| | CD2S2000 | TE | A | B | A | - | B | A | A |
| | CD2S2500 | TE | A | B | A | - | B | A | A |
| | CD2S3000 | TE | A | B | A | - | B | A | A |
| | CD2S3500 | TE | A | B | A | - | B | A | A |

***A*** Accessori di normale fornitura / Standard supply / Accessoires livrés normalement / Zubehörteile für Standardauslieferung

***B*** Accessori su richiesta / Optional accessories / Accessoires sur demande / Zubehörteile auf Wunsch

***TK*** Termik

***TE*** PTC

***** Vedere nota alle dimensioni d'ingombro / Please see note in the overall dimensions / S'il vous plaît voir la note de l'encombrements / Bitte siehe Hinweis in den Abmessungen

OFFICINE MARIO DORIN SINCE 1918
DORIN INNOVATION

# R744
# CO2
# (CD-B)

| Serie Range Serie Serie | Modello Model Modèle Typ | Condizioni operative Operating conditions Conditions d'utilisation Betriebsbedingungen | | | | Q [W] | | Capacità frigorifera Refrigerating capacity Puissance frigorifique Kälteleistung | | | P [kW] | | Potenza assorbita Power input Puissance absorbée Leistungsaufnahme | | | |
|---|---|---|---|---|---|---|---|---|---|---|---|---|---|---|---|---|
| | | Tc | Tgcout | pc | | Temperatura evaporazione / Evaporating temperature Température d'évaporation / Verdampfungstemperatur [°C] | | | | | | | | | | |
| | | [°C] | [°C] | [bar] | | +10 | +5 | 0 | -5 | -10 | -15 | -20 | -25 | -30 | -35 | -40 |
| CD300 | CD750B | 0 | -- | (34,9) | Q | | | | | | 24810 | 20660 | 16980 | 13770 | 11060 | 8840 |
| | | | | | P | | | | | | 2,88 | 3,24 | 3,48 | 3,62 | 3,67 | 3,65 |
| | | 5 | -- | (39,7) | Q | | | | | | 23040 | 19130 | 15650 | 12640 | 10080 | 8000 |
| | | | | | P | | | | | | 3,61 | 3,88 | 4,05 | 4,12 | 4,10 | 4,02 |
| | | 10 | -- | (45,0) | Q | | | | | | 21230 | 17550 | 14300 | 11480 | 9090 | 7150 |
| | | | | | P | | | | | | 4,32 | 4,51 | 4,59 | 4,58 | 4,50 | 4,36 |
| | | 15 | -- | (50,9) | Q | | | | | | 19340 | 15920 | 12900 | 10280 | 8080 | 6290 |
| | | | | | P | | | | | | 5,01 | 5,10 | 5,10 | 5,01 | 4,86 | 4,66 |
| | | 20 | -- | (57,3) | Q | | | | | | 17340 | 14210 | 11440 | 9050 | 7040 | |
| | | | | | P | | | | | | 5,66 | 5,66 | 5,57 | 5,40 | 5,17 | |
| | CD800B | 0 | -- | (34,9) | Q | | | | | | 31790 | 26560 | 21900 | 17840 | 14380 | 11530 |
| | | | | | P | | | | | | 3,72 | 4,19 | 4,52 | 4,72 | 4,80 | 4,78 |
| | | 5 | -- | (39,7) | Q | | | | | | 29610 | 24660 | 20250 | 16410 | 13140 | 10450 |
| | | | | | P | | | | | | 4,67 | 5,04 | 5,27 | 5,37 | 5,37 | 5,28 |
| | | 10 | -- | (45,0) | Q | | | | | | 27350 | 22690 | 18550 | 14940 | 11870 | 9360 |
| | | | | | P | | | | | | 5,61 | 5,87 | 5,99 | 6,00 | 5,90 | 5,73 |
| | | 15 | -- | (50,9) | Q | | | | | | 24980 | 20640 | 16780 | 13420 | 10570 | 8240 |
| | | | | | P | | | | | | 6,51 | 6,66 | 6,67 | 6,57 | 6,39 | 6,12 |
| | | 20 | -- | (57,3) | Q | | | | | | 22460 | 18470 | 14920 | 11830 | 9220 | |
| | | | | | P | | | | | | 7,38 | 7,40 | 7,29 | 7,09 | 6,80 | |
| | CD1000B | 0 | -- | (34,9) | Q | | | | | | 41770 | 34910 | 28810 | 23480 | 18940 | 15210 |
| | | | | | P | | | | | | 4,67 | 5,32 | 5,77 | 6,04 | 6,16 | 6,15 |
| | | 5 | -- | (39,7) | Q | | | | | | 38900 | 32410 | 26630 | 21600 | 17320 | 13800 |
| | | | | | P | | | | | | 5,90 | 6,41 | 6,73 | 6,88 | 6,89 | 6,78 |
| | | 10 | -- | (45,0) | Q | | | | | | 35920 | 29820 | 24400 | 19670 | 15660 | 12360 |
| | | | | | P | | | | | | 7,11 | 7,48 | 7,66 | 7,69 | 7,58 | 7,36 |
| | | 15 | -- | (50,9) | Q | | | | | | 32810 | 27130 | 22070 | 17680 | 13950 | 10900 |
| | | | | | P | | | | | | 8,29 | 8,50 | 8,54 | 8,44 | 8,21 | 7,87 |
| | | 20 | -- | (57,3) | Q | | | | | | 29490 | 24270 | 19630 | 15590 | 12180 | |
| | | | | | P | | | | | | 9,41 | 9,47 | 9,36 | 9,11 | 8,75 | |
| CD400 | CD1200B | 0 | -- | (34,9) | Q | | | | | | 47980 | 40100 | 33100 | 27020 | 21870 | 17650 |
| | | | | | P | | | | | | 5,37 | 6,10 | 6,61 | 6,92 | 7,07 | 7,07 |
| | | 5 | -- | (39,7) | Q | | | | | | 44800 | 37320 | 30690 | 24920 | 20040 | 16050 |
| | | | | | P | | | | | | 6,77 | 7,35 | 7,72 | 7,90 | 7,92 | 7,80 |
| | | 10 | -- | (45,0) | Q | | | | | | 41490 | 34440 | 28180 | 22750 | 18150 | 14400 |
| | | | | | P | | | | | | 8,17 | 8,58 | 8,79 | 8,83 | 8,71 | 8,48 |
| | | 15 | -- | (50,9) | Q | | | | | | 38000 | 31410 | 25560 | 20490 | 16200 | 12700 |
| | | | | | P | | | | | | 9,53 | 9,77 | 9,81 | 9,69 | 9,44 | 9,08 |
| | | 20 | -- | (57,3) | Q | | | | | | 34250 | 28170 | 22780 | 18100 | 14150 | |
| | | | | | P | | | | | | 10,85 | 10,90 | 10,77 | 10,48 | 10,08 | |
| | CD1500B | 0 | -- | (34,9) | Q | | | | | | 55060 | 46010 | 37980 | 31000 | 25090 | 20250 |
| | | | | | P | | | | | | 6,23 | 7,03 | 7,58 | 7,91 | 8,05 | 8,03 |
| | | 5 | -- | (39,7) | Q | | | | | | 51410 | 42820 | 35210 | 28590 | 22990 | 18410 |
| | | | | | P | | | | | | 7,81 | 8,44 | 8,82 | 9,00 | 9,00 | 8,85 |
| | | 10 | -- | (45,0) | Q | | | | | | 47600 | 39510 | 32330 | 26100 | 20830 | 16530 |
| | | | | | P | | | | | | 9,38 | 9,82 | 10,03 | 10,04 | 9,88 | 9,59 |
| | | 15 | -- | (50,9) | Q | | | | | | 43590 | 36030 | 29330 | 23510 | 18590 | 14580 |
| | | | | | P | | | | | | 10,92 | 11,15 | 11,17 | 11,00 | 10,69 | 10,25 |
| | | 20 | -- | (57,3) | Q | | | | | | 39290 | 32320 | 26130 | 20770 | 16240 | |
| | | | | | P | | | | | | 12,39 | 12,4 | 12,22 | 11,87 | 11,38 | |
| | CD2000B | 0 | -- | (34,9) | Q | | | | | | 72400 | 60360 | 49690 | 40440 | 32620 | 26250 |
| | | | | | P | | | | | | 8,06 | 9,07 | 9,74 | 10,13 | 10,27 | 10,21 |
| | | 5 | -- | (39,7) | Q | | | | | | 67470 | 56070 | 45970 | 37210 | 29830 | 23810 |
| | | | | | P | | | | | | 10,09 | 10,86 | 11,31 | 11,49 | 11,44 | 11,21 |
| | | 10 | -- | (45,0) | Q | | | | | | 62350 | 51620 | 42120 | 33890 | 26960 | 21320 |
| | | | | | P | | | | | | 12,08 | 12,60 | 12,81 | 12,77 | 12,53 | 12,12 |
| | | 15 | -- | (50,9) | Q | | | | | | 56980 | 46970 | 38120 | 30450 | 24000 | 18760 |
| | | | | | P | | | | | | 14,02 | 14,26 | 14,22 | 13,95 | 13,50 | 12,90 |
| | | 20 | -- | (57,3) | Q | | | | | | 51240 | 42030 | 33890 | 26840 | 20920 | |
| | | | | | P | | | | | | 15,86 | 15,81 | 15,51 | 15,00 | 14,32 | |
| | CD2500B | 0 | -- | (34,9) | Q | | | | | | 81410 | 67920 | 56000 | 45690 | 37010 | 29960 |
| | | | | | P | | | | | | 9,13 | 10,3 | 11,1 | 11,58 | 11,79 | 11,78 |
| | | 5 | -- | (39,7) | Q | | | | | | 76070 | 63270 | 51950 | 42160 | 33920 | 27240 |
| | | | | | P | | | | | | 11,46 | 12,36 | 12,91 | 13,17 | 13,17 | 12,97 |
| | | 10 | -- | (45,0) | Q | | | | | | 70480 | 58400 | 47720 | 38480 | 30710 | 24410 |
| | | | | | P | | | | | | 13,76 | 14,37 | 14,66 | 14,67 | 14,45 | 14,05 |
| | | 15 | -- | (50,9) | Q | | | | | | 64570 | 53270 | 43270 | 34630 | 27360 | 21480 |
| | | | | | P | | | | | | 16,00 | 16,31 | 16,31 | 16,05 | 15,59 | 14,98 |
| | | 20 | -- | (57,3) | Q | | | | | | 58190 | 47750 | 38520 | 30540 | 23840 | |
| | | | | | P | | | | | | 18,14 | 18,12 | 17,82 | 17,28 | 16,57 | |
| | CD3000B | 0 | -- | (34,9) | Q | | | | | | 94950 | 79310 | 65440 | 53380 | 43180 | 34850 |
| | | | | | P | | | | | | 11,01 | 12,32 | 13,20 | 13,71 | 13,91 | 13,84 |
| | | 5 | -- | (39,7) | Q | | | | | | 88620 | 73790 | 60640 | 49230 | 39570 | 31690 |
| | | | | | P | | | | | | 13,72 | 14,72 | 15,31 | 15,56 | 15,51 | 15,22 |
| | | 10 | -- | (45,0) | Q | | | | | | 82020 | 68060 | 55670 | 44930 | 35840 | 28440 |
| | | | | | P | | | | | | 16,40 | 17,07 | 17,35 | 17,31 | 17,00 | 16,47 |
| | | 15 | -- | (50,9) | Q | | | | | | 75090 | 62050 | 50490 | 40460 | 31990 | 25090 |
| | | | | | P | | | | | | 19,01 | 19,32 | 19,28 | 18,94 | 18,35 | 17,57 |
| | | 20 | -- | (57,3) | Q | | | | | | 67650 | 55630 | 44980 | 35740 | 27950 | |
| | | | | | P | | | | | | 21,50 | 21,44 | 21,05 | 20,39 | 19,51 | |
| | CD3500B | 0 | -- | (34,9) | Q | | | | | | 108000 | 90350 | 74700 | 61090 | 49550 | 40120 |
| | | | | | P | | | | | | 11,78 | 13,46 | 14,64 | 15,38 | 15,74 | 15,79 |
| | | 5 | -- | (39,7) | Q | | | | | | 101000 | 84200 | 69350 | 56440 | 45510 | 36570 |
| | | | | | P | | | | | | 14,94 | 16,28 | 17,14 | 17,58 | 17,67 | 17,46 |
| | | 10 | -- | (45,0) | Q | | | | | | 93560 | 77790 | 63790 | 51620 | 41320 | 32910 |
| | | | | | P | | | | | | 18,09 | 19,06 | 19,57 | 19,69 | 19,48 | 19,01 |
| | | 15 | -- | (50,9) | Q | | | | | | 85790 | 71050 | 57960 | 46590 | 36980 | 29130 |
| | | | | | P | | | | | | 21,16 | 21,74 | 21,88 | 21,66 | 21,14 | 20,38 |
| | | 20 | -- | (57,3) | Q | | | | | | 77430 | 63830 | 51750 | 41270 | 32410 | |
| | | | | | P | | | | | | 24,11 | 24,27 | 24,02 | 23,44 | 22,59 | |

- Funzionamento a 50 Hz
- Per funzionamento a 60 Hz, moltiplicare la resa per 1,18
- Le prestazioni si basano sulla norma europea EN12900
- Non miscelare mai olii estere con olii differenti

- Frequency rate 50 Hz
- For 60 Hz operation, data to be multiplied by 1,18
- Performance data are based on European Standard EN12900
- Never mix ester oils with different oils

- Fonctionnement à 50 Hz
- Pour le fonctionnement à 60 Hz, multiplier le rendement par 1,18
- Les données de puissance se basent sur la norme européenne EN 12900
- Ne mélanger jamais ester huiles avec different huiles

- Frequenz 50 Hz
- Für 60 Hz-Betrieb ist die Leistung mit 1,18 zu multiplizieren
- Leistungswerte basieren auf der europäischen Norm EN 12900
- Niemals Esteröl mit anderen Ölen vermischen

# R744 CO2 (CD-M) (CD-H)

| Serie / Range / Serie / Serie | Modello / Model / Modèle / Typ | Condizioni operative / Operating conditions / Conditions d'utilisation / Betriebsbedingungen | | | | Q [W] | | Capacità frigorifera / Refrigerating capacity / Puissance frigorifique / Kälteleistung | | | P [kW] | | Potenza assorbita / Power input / Puissance absorbée / Leistungsaufnahme | | | |
|---|---|---|---|---|---|---|---|---|---|---|---|---|---|---|---|---|
| | | | | | | Temperatura evaporazione / Evaporating temperature / Température d'évaporation / Verdampfungstemperatur [°C] | | | | | | | | | | |
| | | Tc [°C] | Tgcout [°C] | pc [bar] | | +10 | +5 | 0 | -5 | -10 | -15 | -20 | -25 | -30 | -35 | -40 |
| CD200 | CD150M | 0 | -- | (34,9) | Q | | | | | | 3720 | 3050 | 2480 | 2000 | 1600 | 1300 |
| | | | | | P | | | | | | 0,47 | 0,52 | 0,54 | 0,56 | 0,56 | 0,55 |
| | | 5 | -- | (39,7) | Q | | | | | 4110 | 3410 | 2800 | 2260 | 1810 | 1440 | 1170 |
| | | | | | P | | | | | 0,52 | 0,58 | 0,61 | 0,62 | 0,63 | 0,62 | 0,60 |
| | | 10 | -- | (45,0) | Q | | | 5270 | 4480 | 3760 | 3110 | 2540 | 2040 | 1620 | 1290 | 1040 |
| | | | | | P | | | 0,50 | 0,58 | 0,64 | 0,68 | 0,70 | 0,70 | 0,69 | 0,67 | 0,65 |
| | | 15 | -- | (50,9) | Q | | | 4790 | 4070 | 3400 | 2800 | 2270 | 1820 | 1440 | 1140 | 905 |
| | | | | | P | | | 0,66 | 0,72 | 0,76 | 0,78 | 0,78 | 0,77 | 0,75 | 0,73 | 0,69 |
| | | 20 | -- | (57,3) | Q | | | 4290 | 3630 | 3030 | 2480 | 2000 | 1590 | 1250 | 980 | |
| | | | | | P | | | 0,81 | 0,85 | 0,87 | 0,88 | 0,86 | 0,84 | 0,81 | 0,77 | |
| | | 25 | -- | (64,3) | Q | | | 3740 | 3160 | 2620 | 2140 | 1720 | 1360 | 1060 | 825 | |
| | | | | | P | | | 0,95 | 0,97 | 0,97 | 0,96 | 0,94 | 0,90 | 0,86 | 0,81 | |
| | | -- | 30 | 75 | Q | | | 3220 | 2710 | 2240 | 1820 | 1450 | 1140 | 880 | | |
| | | | | | P | | | 1,13 | 1,12 | 1,10 | 1,07 | 1,02 | 0,97 | 0,92 | | |
| | | -- | 35 | 90 | Q | | | 2880 | 2410 | 1980 | 1600 | 1260 | 980 | | | |
| | | | | | P | | | 1,33 | 1,29 | 1,24 | 1,18 | 1,11 | 1,05 | | | |
| | | -- | 40 | 100 | Q | | | 2510 | 2090 | 1720 | 1380 | 1090 | | | | |
| | | | | | P | | | 1,45 | 1,39 | 1,32 | 1,25 | 1,17 | | | | |
| | | -- | 45 | 110 | Q | | | 2200 | 1830 | 1500 | 1200 | 950 | | | | |
| | | | | | P | | | 1,55 | 1,48 | 1,40 | 1,32 | 1,24 | | | | |
| | CD180H | 0 | -- | (34,9) | Q | | | | | | 3710 | 3060 | 2510 | 2060 | | |
| | | | | | P | | | | | | 0,49 | 0,54 | 0,57 | 0,58 | | |
| | | 5 | -- | (39,7) | Q | | | | | 4110 | 3410 | 2800 | 2290 | 1870 | | |
| | | | | | P | | | | | 0,54 | 0,60 | 0,64 | 0,66 | 0,66 | | |
| | | 10 | -- | (45,0) | Q | | | 5310 | 4500 | 3760 | 3110 | 2540 | 2060 | 1680 | | |
| | | | | | P | | | 0,50 | 0,60 | 0,67 | 0,71 | 0,73 | 0,74 | 0,73 | | |
| | | 15 | -- | (50,9) | Q | | 5640 | 4830 | 4080 | 3400 | 2800 | 2280 | 1840 | 1490 | | |
| | | | | | P | | 0,55 | 0,66 | 0,74 | 0,79 | 0,82 | 0,83 | 0,82 | 0,79 | | |
| | | 20 | -- | (57,3) | Q | 5850 | 5070 | 4330 | 3650 | 3030 | 2490 | 2010 | 1620 | 1300 | | |
| | | | | | P | 0,61 | 0,73 | 0,82 | 0,88 | 0,91 | 0,92 | 0,91 | 0,89 | 0,85 | | |
| | | 25 | -- | (64,3) | Q | 5130 | 4440 | 3780 | 3180 | 2630 | 2150 | 1730 | 1380 | 1100 | | |
| | | | | | P | 0,81 | 0,91 | 0,97 | 1,01 | 1,02 | 1,02 | 0,99 | 0,96 | 0,90 | | |
| | | -- | 30 | 75 | Q | 4450 | 3840 | 3260 | 2730 | 2250 | 1830 | 1460 | 1160 | 915 | | |
| | | | | | P | 1,07 | 1,13 | 1,17 | 1,18 | 1,16 | 1,13 | 1,09 | 1,03 | 0,96 | | |
| | | -- | 35 | 90 | Q | 4020 | 3460 | 2930 | 2440 | 2000 | 1610 | 1280 | 1000 | | | |
| | | | | | P | 1,37 | 1,39 | 1,38 | 1,35 | 1,31 | 1,25 | 1,18 | 1,10 | | | |
| | | -- | 40 | 100 | Q | 3530 | 3030 | 2560 | 2130 | 1740 | 1400 | 1100 | | | | |
| | | | | | P | 1,53 | 1,52 | 1,49 | 1,45 | 1,38 | 1,30 | 1,22 | | | | |
| | | -- | 45 | 110 | Q | 3100 | 2670 | 2250 | 1870 | 1520 | 1220 | | | | | |
| | | | | | P | 1,67 | 1,64 | 1,59 | 1,52 | 1,44 | 1,35 | | | | | |
| | | -- | 25 | 100 | Q | 5050 | 4320 | 3640 | 3020 | 2460 | 1970 | 1560 | | | | |
| | | | | | P | 1,53 | 1,52 | 1,49 | 1,45 | 1,38 | 1,30 | 1,22 | | | | |
| | | -- | 25 | 120 | Q | 4900 | 4170 | 3500 | 2890 | 2350 | 1880 | | | | | |
| | | | | | P | 1,79 | 1,74 | 1,67 | 1,59 | 1,50 | 1,40 | | | | | |
| | | -- | 25 | 140 | Q | 4770 | 4060 | 3400 | 2810 | | | | | | | |
| | | | | | P | 2,01 | 1,93 | 1,83 | 1,73 | | | | | | | |
| | CD180M | 0 | -- | (34,9) | Q | | | | | | 5020 | 4140 | 3380 | 2730 | 2200 | 1780 |
| | | | | | P | | | | | | 0,64 | 0,7 | 0,74 | 0,76 | 0,76 | 0,75 |
| | | 5 | -- | (39,7) | Q | | | | | 5550 | 4630 | 3810 | 3090 | 2480 | 1980 | 1590 |
| | | | | | P | | | | | 0,71 | 0,78 | 0,83 | 0,85 | 0,86 | 0,85 | 0,82 |
| | | 10 | -- | (45,0) | Q | | | 7090 | 6050 | 5100 | 4230 | 3460 | 2790 | 2230 | 1760 | 1410 |
| | | | | | P | | | 0,68 | 0,79 | 0,88 | 0,93 | 0,96 | 0,96 | 0,95 | 0,92 | 0,89 |
| | | 15 | -- | (50,9) | Q | | | 6470 | 5510 | 4630 | 3830 | 3110 | 2500 | 1970 | 1550 | 1220 |
| | | | | | P | | | 0,89 | 0,98 | 1,03 | 1,07 | 1,07 | 1,06 | 1,03 | 0,99 | 0,94 |
| | | 20 | -- | (57,3) | Q | | | 5820 | 4940 | 4130 | 3400 | 2750 | 2190 | 1720 | 1330 | |
| | | | | | P | | | 1,10 | 1,16 | 1,19 | 1,20 | 1,18 | 1,15 | 1,11 | 1,05 | |
| | | 25 | -- | (64,3) | Q | | | 5090 | 4310 | 3600 | 2940 | 2370 | 1870 | 1450 | 1110 | |
| | | | | | P | | | 1,29 | 1,33 | 1,33 | 1,32 | 1,28 | 1,23 | 1,17 | 1,10 | |
| | | -- | 30 | 75 | Q | | | 4400 | 3710 | 3080 | 2500 | 1990 | 1550 | 1180 | | |
| | | | | | P | | | 1,54 | 1,54 | 1,51 | 1,46 | 1,4 | 1,32 | 1,24 | | |
| | | -- | 35 | 90 | Q | | | 3960 | 3310 | 2720 | 2190 | 1720 | 1310 | | | |
| | | | | | P | | | 1,83 | 1,78 | 1,70 | 1,62 | 1,52 | 1,41 | | | |
| | | -- | 40 | 100 | Q | | | 3450 | 2880 | 2360 | 1880 | 1460 | | | | |
| | | | | | P | | | 1,99 | 1,91 | 1,81 | 1,7 | 1,58 | | | | |
| | | -- | 45 | 110 | Q | | | 3030 | 2520 | 2050 | 1620 | 1250 | | | | |
| | | | | | P | | | 2,14 | 2,03 | 1,91 | 1,79 | 1,65 | | | | |
| | CD300H | 0 | -- | (34,9) | Q | | | | | | 5020 | 4140 | 3400 | 2790 | | |
| | | | | | P | | | | | | 0,65 | 0,72 | 0,77 | 0,78 | | |
| | | 5 | -- | (39,7) | Q | | | | | 5560 | 4620 | 3790 | 3100 | 2530 | | |
| | | | | | P | | | | | 0,72 | 0,80 | 0,86 | 0,88 | 0,88 | | |
| | | 10 | -- | (45,0) | Q | | | 7160 | 6080 | 5090 | 4210 | 3450 | 2800 | 2270 | | |
| | | | | | P | | | 0,67 | 0,80 | 0,89 | 0,95 | 0,99 | 0,99 | 0,98 | | |
| | | 15 | -- | (50,9) | Q | | 7620 | 6530 | 5520 | 4610 | 3800 | 3090 | 2500 | 2010 | | |
| | | | | | P | | 0,74 | 0,88 | 0,99 | 1,06 | 1,10 | 1,11 | 1,10 | 1,07 | | |
| | | 20 | -- | (57,3) | Q | 7900 | 6850 | 5860 | 4940 | 4110 | 3370 | 2730 | 2190 | 1760 | | |
| | | | | | P | 0,83 | 0,98 | 1,1 | 1,18 | 1,22 | 1,24 | 1,23 | 1,2 | 1,15 | | |
| | | 25 | -- | (64,3) | Q | 6930 | 6000 | 5120 | 4310 | 3570 | 2920 | 2350 | 1870 | 1490 | | |
| | | | | | P | 1,09 | 1,22 | 1,30 | 1,35 | 1,37 | 1,37 | 1,33 | 1,28 | 1,21 | | |
| | | -- | 30 | 75 | Q | 6020 | 5200 | 4420 | 3710 | 3060 | 2480 | 1980 | 1560 | 1230 | | |
| | | | | | P | 1,44 | 1,52 | 1,56 | 1,58 | 1,56 | 1,52 | 1,46 | 1,38 | 1,29 | | |
| | | -- | 35 | 90 | Q | 5450 | 4700 | 3980 | 3310 | 2710 | 2180 | 1730 | 1350 | | | |
| | | | | | P | 1,83 | 1,86 | 1,85 | 1,82 | 1,76 | 1,68 | 1,58 | 1,47 | | | |
| | | -- | 40 | 100 | Q | 4780 | 4110 | 3480 | 2890 | 2360 | 1890 | 1490 | | | | |
| | | | | | P | 2,05 | 2,04 | 2 | 1,94 | 1,86 | 1,76 | 1,64 | | | | |
| | | -- | 45 | 110 | Q | 4210 | 3620 | 3060 | 2540 | 2060 | 1650 | | | | | |
| | | | | | P | 2,24 | 2,20 | 2,13 | 2,05 | 1,94 | 1,82 | | | | | |
| | | -- | 25 | 100 | Q | 6860 | 5870 | 4950 | 4100 | 3340 | 2670 | 2110 | | | | |
| | | | | | P | 2,05 | 2,04 | 2 | 1,94 | 1,86 | 1,76 | 1,64 | | | | |
| | | -- | 25 | 120 | Q | 6650 | 5670 | 4750 | 3920 | 3180 | 2530 | | | | | |
| | | | | | P | 2,4 | 2,34 | 2,25 | 2,14 | 2,02 | 1,88 | | | | | |
| | | -- | 25 | 140 | Q | 6470 | 5510 | 4610 | 3800 | | | | | | | |
| | | | | | P | 2,70 | 2,60 | 2,47 | 2,33 | | | | | | | |

- Funzionamento a 50 Hz
- Per funzionamento a 60 Hz, moltiplicare la resa per 1,18
- Le prestazioni si basano sulla norma europea EN12900
- Non miscelare mai olii estere con olii differenti

- Frequency rate 50 Hz
- For 60 Hz operation, data to be multiplied by 1,18
- Performance data are based on European Standard EN12900
- Never mix ester oils with different oils

- Fonctionnement à 50 Hz
- Pour le fonctionnement à 60 Hz, multiplier le rendement par 1,18
- Les données de puissance se basent sur la norme européenne EN 12900
- Ne mélanger jamais ester huiles avec different huiles

- Frequenz 50 Hz
- Für 60 Hz-Betrieb ist die Leistung mit 1,18 zu multiplizieren
- Leistungswerte basieren auf der europäischen Norm EN 12900
- Niemals Esteröl mit anderen Ölen vermischen

OFFICINE MARIO DORIN SINCE 1918
DORIN INNOVATION

# R744
# CO2
# (CD-M)
# (CD-H)

| Serie / Range / Serie / Serie | Modello / Model / Modèle / Typ | Condizioni operative / Operating conditions / Conditions d'utilisation / Betriebsbedingungen | | | | Q [W] | | Capacità frigorifera / Refrigerating capacity / Puissance frigorifique / Kälteleistung | | | P [kW] | | Potenza assorbita / Power input / Puissance absorbée / Leistungsaufnahme | | | |
|---|---|---|---|---|---|---|---|---|---|---|---|---|---|---|---|---|
| | | | | | | Temperatura evaporazione / Evaporating temperature / Température d'évaporation / Verdampfungstemperatur [°C] | | | | | | | | | | |
| | | Tc [°C] | Tgcout [°C] | pc [bar] | | +10 | +5 | 0 | -5 | -10 | -15 | -20 | -25 | -30 | -35 | -40 |
| CD200 | CD300M | 0 | -- | (34,9) | Q | | | | | | 6630 | 5460 | 4440 | 3580 | 2880 | 2340 |
| | | | | | P | | | | | | 0,82 | 0,91 | 0,96 | 0,99 | 0,99 | 0,97 |
| | | 5 | -- | (39,7) | Q | | | | | 7340 | 6100 | 5010 | 4060 | 3250 | 2600 | 2100 |
| | | | | | P | | | | | 0,92 | 1,02 | 1,08 | 1,11 | 1,11 | 1,10 | 1,07 |
| | | 10 | -- | (45,0) | Q | | | 9390 | 8000 | 6720 | 5570 | 4550 | 3670 | 2920 | 2320 | 1860 |
| | | | | | P | | | 0,87 | 1,02 | 1,13 | 1,20 | 1,24 | 1,25 | 1,23 | 1,20 | 1,15 |
| | | 15 | -- | (50,9) | Q | | | 8550 | 7270 | 6090 | 5030 | 4090 | 3270 | 2590 | 2040 | 1630 |
| | | | | | P | | | 1,15 | 1,26 | 1,34 | 1,38 | 1,39 | 1,38 | 1,34 | 1,29 | 1,23 |
| | | 20 | -- | (57,3) | Q | | | 7670 | 6510 | 5430 | 4460 | 3610 | 2870 | 2260 | 1770 | |
| | | | | | P | | | 1,41 | 1,50 | 1,54 | 1,55 | 1,53 | 1,49 | 1,44 | 1,37 | |
| | | 25 | -- | (64,3) | Q | | | 6710 | 5670 | 4720 | 3860 | 3100 | 2450 | 1910 | 1480 | |
| | | | | | P | | | 1,67 | 1,72 | 1,73 | 1,71 | 1,66 | 1,60 | 1,52 | 1,44 | |
| | | -- | 30 | 75 | Q | | | 5780 | 4870 | 4030 | 3280 | 2610 | 2050 | 1580 | | |
| | | | | | P | | | 2,00 | 1,99 | 1,96 | 1,90 | 1,82 | 1,73 | 1,62 | | |
| | | -- | 35 | 90 | Q | | | 5180 | 4340 | 3570 | 2880 | 2270 | 1760 | | | |
| | | | | | P | | | 2,37 | 2,30 | 2,21 | 2,10 | 1,99 | 1,86 | | | |
| | | -- | 40 | 100 | Q | | | 4520 | 3780 | 3090 | 2480 | 1950 | | | | |
| | | | | | P | | | 2,57 | 2,47 | 2,35 | 2,22 | 2,08 | | | | |
| | | -- | 45 | 110 | Q | | | 3960 | 3300 | 2700 | 2160 | 1690 | | | | |
| | | | | | P | | | 2,77 | 2,64 | 2,50 | 2,35 | 2,19 | | | | |
| | CD350H | 0 | -- | (34,9) | Q | | | | | | 6660 | 5500 | 4510 | 3700 | | |
| | | | | | P | | | | | | 0,85 | 0,94 | 1,00 | 1,02 | | |
| | | 5 | -- | (39,7) | Q | | | | | 7380 | 6130 | 5040 | 4110 | 3350 | | |
| | | | | | P | | | | | 0,94 | 1,05 | 1,11 | 1,15 | 1,15 | | |
| | | 10 | -- | (45,0) | Q | | | 9510 | 8070 | 6760 | 5590 | 4570 | 3710 | 3010 | | |
| | | | | | P | | | 0,87 | 1,04 | 1,16 | 1,24 | 1,28 | 1,29 | 1,27 | | |
| | | 15 | -- | (50,9) | Q | | 10110 | 8670 | 7330 | 6120 | 5040 | 4100 | 3310 | 2670 | | |
| | | | | | P | | 0,97 | 1,15 | 1,29 | 1,38 | 1,43 | 1,45 | 1,43 | 1,39 | | |
| | | 20 | -- | (57,3) | Q | 10490 | 9090 | 7780 | 6560 | 5460 | 4480 | 3620 | 2900 | 2320 | | |
| | | | | | P | 1,08 | 1,28 | 1,43 | 1,53 | 1,59 | 1,61 | 1,60 | 1,56 | 1,49 | | |
| | | 25 | -- | (64,3) | Q | 9200 | 7970 | 6800 | 5720 | 4740 | 3870 | 3110 | 2480 | 1970 | | |
| | | | | | P | 1,42 | 1,58 | 1,69 | 1,76 | 1,79 | 1,78 | 1,74 | 1,67 | 1,58 | | |
| | | -- | 30 | 75 | Q | 7990 | 6900 | 5880 | 4920 | 4050 | 3280 | 2620 | 2060 | 1620 | | |
| | | | | | P | 1,87 | 1,98 | 2,03 | 2,05 | 2,03 | 1,98 | 1,90 | 1,80 | 1,68 | | |
| | | -- | 35 | 90 | Q | 7240 | 6240 | 5280 | 4400 | 3600 | 2890 | 2280 | 1770 | | | |
| | | | | | P | 2,38 | 2,42 | 2,41 | 2,36 | 2,29 | 2,19 | 2,06 | 1,91 | | | |
| | | -- | 40 | 100 | Q | 6350 | 5460 | 4620 | 3830 | 3120 | 2490 | 1960 | | | | |
| | | | | | P | 2,66 | 2,65 | 2,60 | 2,52 | 2,42 | 2,28 | 2,13 | | | | |
| | | -- | 45 | 110 | Q | 5590 | 4810 | 4060 | 3360 | 2730 | 2170 | | | | | |
| | | | | | P | 2,90 | 2,85 | 2,77 | 2,66 | 2,53 | 2,37 | | | | | |
| | | -- | 25 | 100 | Q | 9110 | 7790 | 6560 | 5430 | 4420 | 3530 | 2770 | | | | |
| | | | | | P | 2,66 | 2,65 | 2,60 | 2,52 | 2,42 | 2,28 | 2,13 | | | | |
| | | -- | 25 | 120 | Q | 8830 | 7520 | 6300 | 5190 | 4200 | 3330 | | | | | |
| | | | | | P | 3,12 | 3,04 | 2,92 | 2,79 | 2,62 | 2,45 | | | | | |
| | | -- | 25 | 140 | Q | 8590 | 7300 | 6100 | 5010 | | | | | | | |
| | | | | | P | 3,52 | 3,38 | 3,22 | 3,04 | | | | | | | |
| | CD350M | 0 | -- | (34,9) | Q | | | | | | 8460 | 6990 | 5700 | 4610 | 3710 | 3010 |
| | | | | | P | | | | | | 1,04 | 1,15 | 1,22 | 1,25 | 1,26 | 1,24 |
| | | 5 | -- | (39,7) | Q | | | | | 9370 | 7810 | 6420 | 5220 | 4190 | 3350 | 2700 |
| | | | | | P | | | | | 1,16 | 1,28 | 1,36 | 1,41 | 1,41 | 1,40 | 1,35 |
| | | 10 | -- | (45,0) | Q | | | 11960 | 10210 | 8600 | 7140 | 5850 | 4720 | 3770 | 2990 | 2390 |
| | | | | | P | | | 1,10 | 1,29 | 1,43 | 1,53 | 1,57 | 1,58 | 1,56 | 1,52 | 1,46 |
| | | 15 | -- | (50,9) | Q | | | 10920 | 9300 | 7810 | 6460 | 5260 | 4220 | 3350 | 2630 | 2090 |
| | | | | | P | | | 1,45 | 1,60 | 1,70 | 1,76 | 1,77 | 1,75 | 1,70 | 1,64 | 1,55 |
| | | 20 | -- | (57,3) | Q | | | 9820 | 8340 | 6980 | 5750 | 4660 | 3710 | 2920 | 2270 | |
| | | | | | P | | | 1,79 | 1,90 | 1,96 | 1,97 | 1,95 | 1,90 | 1,83 | 1,74 | |
| | | 25 | -- | (64,3) | Q | | | 8600 | 7280 | 6070 | 4980 | 4010 | 3170 | 2470 | 1900 | |
| | | | | | P | | | 2,12 | 2,18 | 2,20 | 2,17 | 2,12 | 2,04 | 1,94 | 1,82 | |
| | | -- | 30 | 75 | Q | | | 7430 | 6270 | 5200 | 4230 | 3380 | 2640 | 2020 | | |
| | | | | | P | | | 2,54 | 2,54 | 2,50 | 2,42 | 2,32 | 2,19 | 2,06 | | |
| | | -- | 35 | 90 | Q | | | 6690 | 5610 | 4610 | 3720 | 2930 | 2250 | | | |
| | | | | | P | | | 3,02 | 2,94 | 2,82 | 2,69 | 2,53 | 2,36 | | | |
| | | -- | 40 | 100 | Q | | | 5840 | 4880 | 4000 | 3200 | 2500 | | | | |
| | | | | | P | | | 3,29 | 3,16 | 3,01 | 2,84 | 2,65 | | | | |
| | | -- | 45 | 110 | Q | | | 5120 | 4270 | 3480 | 2770 | 2150 | | | | |
| | | | | | P | | | 3,54 | 3,38 | 3,19 | 2,99 | 2,78 | | | | |
| | CD360H | 0 | -- | (34,9) | Q | | | | | | 8590 | 7090 | 5820 | 4770 | | |
| | | | | | P | | | | | | 1,07 | 1,19 | 1,26 | 1,29 | | |
| | | 5 | -- | (39,7) | Q | | | | | 9520 | 7910 | 6500 | 5310 | 4330 | | |
| | | | | | P | | | | | 1,19 | 1,32 | 1,41 | 1,45 | 1,46 | | |
| | | 10 | -- | (45,0) | Q | | | 12270 | 10410 | 8720 | 7210 | 5900 | 4790 | 3890 | | |
| | | | | | P | | | 1,10 | 1,31 | 1,47 | 1,57 | 1,62 | 1,64 | 1,61 | | |
| | | 15 | -- | (50,9) | Q | | 13040 | 11180 | 9460 | 7900 | 6510 | 5300 | 4280 | 3440 | | |
| | | | | | P | | 1,23 | 1,46 | 1,62 | 1,74 | 1,81 | 1,83 | 1,81 | 1,76 | | |
| | | 20 | -- | (57,3) | Q | 13530 | 11730 | 10040 | 8470 | 7050 | 5780 | 4680 | 3750 | 3000 | | |
| | | | | | P | 1,38 | 1,62 | 1,80 | 1,93 | 2,01 | 2,04 | 2,02 | 1,98 | 1,89 | | |
| | | 25 | -- | (64,3) | Q | 11870 | 10280 | 8780 | 7390 | 6120 | 4990 | 4020 | 3200 | 2540 | | |
| | | | | | P | 1,80 | 2,00 | 2,14 | 2,22 | 2,26 | 2,25 | 2,20 | 2,12 | 2,01 | | |
| | | -- | 30 | 75 | Q | 10310 | 8910 | 7580 | 6350 | 5230 | 4240 | 3380 | 2660 | 2090 | | |
| | | | | | P | 2,37 | 2,49 | 2,57 | 2,59 | 2,57 | 2,51 | 2,41 | 2,29 | 2,14 | | |
| | | -- | 35 | 90 | Q | 9350 | 8050 | 6820 | 5680 | 4640 | 3730 | 2940 | 2290 | | | |
| | | | | | P | 3,01 | 3,05 | 3,04 | 2,99 | 2,90 | 2,77 | 2,62 | 2,44 | | | |
| | | -- | 40 | 100 | Q | 8200 | 7050 | 5960 | 4950 | 4030 | 3220 | 2530 | | | | |
| | | | | | P | 3,35 | 3,35 | 3,29 | 3,20 | 3,07 | 2,91 | 2,72 | | | | |
| | | -- | 45 | 110 | Q | 7220 | 6210 | 5240 | 4340 | 3520 | 2810 | | | | | |
| | | | | | P | 3,66 | 3,60 | 3,51 | 3,38 | 3,21 | 3,02 | | | | | |
| | | -- | 25 | 100 | Q | 11760 | 10060 | 8470 | 7020 | 5710 | 4560 | 3580 | | | | |
| | | | | | P | 3,35 | 3,35 | 3,29 | 3,20 | 3,07 | 2,91 | 2,72 | | | | |
| | | -- | 25 | 120 | Q | 11400 | 9710 | 8140 | 6700 | 5420 | 4300 | | | | | |
| | | | | | P | 3,93 | 3,84 | 3,70 | 3,54 | 3,35 | 3,13 | | | | | |
| | | -- | 25 | 140 | Q | 11090 | 9420 | 7880 | 6470 | | | | | | | |
| | | | | | P | 4,44 | 4,28 | 4,09 | 3,88 | | | | | | | |

- Funzionamento a 50 Hz
- Per funzionamento a 60 Hz, moltiplicare la resa per 1,18
- Le prestazioni si basano sulla norma europea EN12900
- Non miscelare mai olii estere con olii differenti

- Frequency rate 50 Hz
- For 60 Hz operation, data to be multiplied by 1,18
- Performance data are based on European Standard EN12900
- Never mix ester oils with different oils

- Fonctionnement à 50 Hz
- Pour le fonctionnement à 60 Hz, multiplier le rendement par 1,18
- Les données de puissance se basent sur la norme européenne EN 12900
- Ne mélanger jamais ester huiles avec different huiles

- Frequenz 50 Hz
- Für 60 Hz-Betrieb ist die Leistung mit 1,18 zu multiplizieren
- Leistungswerte basieren auf der europäischen Norm EN 12900
- Niemals Esteröl mit anderen Ölen vermischen

# R744 CO2 (CD-M) (CD-H)

| Serie / Range / Serie / Serie | Modello / Model / Modèle / Typ | Condizioni operative / Operating conditions / Conditions d'utilisation / Betriebsbedingungen | | | | Q [W] | | Capacità frigorifera / Refrigerating capacity / Puissance frigorifique / Kälteleistung | | | P [kW] | | Potenza assorbita / Power input / Puissance absorbée / Leistungsaufnahme | | | |
|---|---|---|---|---|---|---|---|---|---|---|---|---|---|---|---|---|
| | | | | | | Temperatura evaporazione / Evaporating temperature / Température d'évaporation / Verdampfungstemperatur [°C] | | | | | | | | | | |
| | | Tc [°C] | Tgcout [°C] | pc [bar] | | +10 | +5 | 0 | -5 | -10 | -15 | -20 | -25 | -30 | -35 | -40 |
| CD200 | CD360M | 0 | -- | (34,9) | Q | | | | | | 10520 | 8680 | 7090 | 5730 | 4610 | 3740 |
| | | | | | P | | | | | | 1,34 | 1,48 | 1,56 | 1,60 | 1,61 | 1,59 |
| | | 5 | -- | (39,7) | Q | | | | | 11640 | 9700 | 7980 | 6480 | 5210 | 4160 | 3350 |
| | | | | | P | | | | | 1,49 | 1,65 | 1,75 | 1,80 | 1,81 | 1,79 | 1,74 |
| | | 10 | -- | (45,0) | Q | | | 14860 | 12680 | 10680 | 8870 | 7260 | 5870 | 4680 | 3720 | 2970 |
| | | | | | P | | | 1,43 | 1,67 | 1,84 | 1,95 | 2,01 | 2,03 | 2,00 | 1,95 | 1,88 |
| | | 15 | -- | (50,9) | Q | | | 13560 | 11550 | 9700 | 8020 | 6540 | 5240 | 4150 | 3270 | 2590 |
| | | | | | P | | | 1,87 | 2,06 | 2,18 | 2,24 | 2,26 | 2,24 | 2,18 | 2,10 | 2,00 |
| | | 20 | -- | (57,3) | Q | | | 12200 | 10360 | 8670 | 7140 | 5780 | 4610 | 3620 | 2820 | |
| | | | | | P | | | 2,30 | 2,43 | 2,50 | 2,52 | 2,50 | 2,44 | 2,34 | 2,23 | |
| | | 25 | -- | (64,3) | Q | | | 10680 | 9050 | 7540 | 6180 | 4980 | 3930 | 3060 | 2360 | |
| | | | | | P | | | 2,72 | 2,79 | 2,81 | 2,78 | 2,71 | 2,61 | 2,49 | 2,34 | |
| | | -- | 30 | 75 | Q | | | 9240 | 7790 | 6460 | 5250 | 4190 | 3280 | 2510 | | |
| | | | | | P | | | 3,26 | 3,25 | 3,19 | 3,10 | 2,97 | 2,82 | 2,65 | | |
| | | -- | 35 | 90 | Q | | | 8310 | 6960 | 5730 | 4610 | 3630 | 2800 | | | |
| | | | | | P | | | 3,87 | 3,76 | 3,62 | 3,44 | 3,24 | 3,03 | | | |
| | | -- | 40 | 100 | Q | | | 7250 | 6060 | 4960 | 3970 | 3110 | | | | |
| | | | | | P | | | 4,22 | 4,05 | 3,85 | 3,64 | 3,40 | | | | |
| | | -- | 45 | 110 | Q | | | | 5300 | 4320 | 3440 | 2670 | | | | |
| | | | | | P | | | | 4,33 | 4,09 | 3,83 | 3,57 | | | | |
| | CD380H | 0 | -- | (34,9) | Q | | | | | | 10680 | 8820 | 7240 | 5940 | | |
| | | | | | P | | | | | | 1,38 | 1,53 | 1,62 | 1,66 | | |
| | | 5 | -- | (39,7) | Q | | | | | 11830 | 9830 | 8090 | 6600 | 5380 | | |
| | | | | | P | | | | | 1,53 | 1,70 | 1,81 | 1,86 | 1,87 | | |
| | | 10 | -- | (45,0) | Q | | | 15230 | 12930 | 10840 | 8970 | 7350 | 5960 | 4830 | | |
| | | | | | P | | | 1,43 | 1,70 | 1,89 | 2,02 | 2,08 | 2,10 | 2,06 | | |
| | | 15 | -- | (50,9) | Q | | 16190 | 13890 | 11760 | 9820 | 8100 | 6590 | 5320 | 4280 | | |
| | | | | | P | | 1,59 | 1,88 | 2,10 | 2,24 | 2,32 | 2,35 | 2,32 | 2,25 | | |
| | | 20 | -- | (57,3) | Q | 16790 | 14570 | 12480 | 10540 | 8770 | 7190 | 5820 | 4660 | 3720 | | |
| | | | | | P | 1,78 | 2,09 | 2,32 | 2,48 | 2,58 | 2,61 | 2,59 | 2,52 | 2,42 | | |
| | | 25 | -- | (64,3) | Q | 14740 | 12780 | 10920 | 9190 | 7620 | 6220 | 5000 | 3970 | 3140 | | |
| | | | | | P | 2,33 | 2,58 | 2,75 | 2,86 | 2,90 | 2,88 | 2,82 | 2,71 | 2,56 | | |
| | | -- | 30 | 75 | Q | 12810 | 11080 | 9440 | 7910 | 6510 | 5280 | 4200 | 3300 | 2580 | | |
| | | | | | P | 3,05 | 3,21 | 3,30 | 3,33 | 3,30 | 3,21 | 3,08 | 2,91 | 2,71 | | |
| | | -- | 35 | 90 | Q | 11640 | 10020 | 8490 | 7070 | 5780 | 4630 | 3640 | 2820 | | | |
| | | | | | P | 3,87 | 3,92 | 3,90 | 3,83 | 3,71 | 3,54 | 3,33 | 3,09 | | | |
| | | -- | 40 | 100 | Q | 10210 | 8780 | 7420 | 6160 | 5010 | 3990 | 3120 | | | | |
| | | | | | P | 4,32 | 4,30 | 4,22 | 4,09 | 3,92 | 3,70 | 3,45 | | | | |
| | | -- | 45 | 110 | Q | 8990 | 7730 | 6520 | 5400 | 4370 | 3470 | | | | | |
| | | | | | P | 4,71 | 4,63 | 4,50 | 4,32 | 4,09 | 3,83 | | | | | |
| | | -- | 25 | 100 | Q | 14640 | 12530 | 10550 | 8730 | 7100 | 5650 | 4420 | | | | |
| | | | | | P | 4,32 | 4,30 | 4,22 | 4,09 | 3,92 | 3,70 | 3,45 | | | | |
| | | -- | 25 | 120 | Q | 14200 | 12090 | 10130 | 8330 | 6710 | 5300 | | | | | |
| | | | | | P | 5,05 | 4,92 | 4,74 | 4,51 | 4,25 | 3,96 | | | | | |
| | | -- | 25 | 140 | Q | | 11710 | 9780 | 8010 | | | | | | | |
| | | | | | P | | 5,48 | 5,21 | 4,92 | | | | | | | |
| CD300 | CD700H | 0 | -- | (34,9) | Q | | | | | | 15120 | 12610 | 10460 | 8660 | | |
| | | | | | P | | | | | | 1,76 | 1,98 | 2,11 | 2,18 | | |
| | | 5 | -- | (39,7) | Q | | | | | 16700 | 14010 | 11640 | 9610 | 7930 | | |
| | | | | | P | | | | | 1,95 | 2,19 | 2,36 | 2,45 | 2,47 | | |
| | | 10 | -- | (45,0) | Q | | | 21290 | 18210 | 15400 | 12880 | 10660 | 8760 | 7180 | | |
| | | | | | P | | | 1,81 | 2,16 | 2,44 | 2,63 | 2,74 | 2,78 | 2,75 | | |
| | | 15 | -- | (50,9) | Q | | 22600 | 19530 | 16680 | 14060 | 11720 | 9660 | 7900 | 6430 | | |
| | | | | | P | | 2,02 | 2,41 | 2,70 | 2,92 | 3,05 | 3,11 | 3,10 | 3,02 | | |
| | | 20 | -- | (57,3) | Q | 23440 | 20480 | 17670 | 15050 | 12660 | 10510 | 8620 | 7010 | 5670 | | |
| | | | | | P | 2,27 | 2,68 | 3,00 | 3,23 | 3,39 | 3,46 | 3,46 | 3,4 | 3,27 | | |
| | | 25 | -- | (64,3) | Q | 20710 | 18080 | 15580 | 13240 | 11100 | 9180 | 7490 | 6050 | 4870 | | |
| | | | | | P | 2,99 | 3,33 | 3,58 | 3,75 | 3,84 | 3,85 | 3,80 | 3,68 | 3,50 | | |
| | | -- | 30 | 75 | Q | 18180 | 15850 | 13630 | 11550 | 9640 | 7930 | 6420 | 5150 | 4090 | | |
| | | | | | P | 3,96 | 4,19 | 4,35 | 4,42 | 4,42 | 4,35 | 4,22 | 4,02 | 3,77 | | |
| | | -- | 35 | 90 | Q | 16750 | 14560 | 12480 | 10530 | 8740 | 7140 | 5740 | 4550 | | | |
| | | | | | P | 5,09 | 5,20 | 5,23 | 5,19 | 5,08 | 4,90 | 4,67 | 4,38 | | | |
| | | -- | 40 | 100 | Q | 14840 | 12900 | 11040 | 9300 | 7700 | 6270 | 5010 | | | | |
| | | | | | P | 5,73 | 5,77 | 5,73 | 5,62 | 5,44 | 5,21 | 4,92 | | | | |
| | | -- | 45 | 110 | Q | 13200 | 11480 | 9820 | 8260 | 6820 | 5540 | | | | | |
| | | | | | P | 6,32 | 6,29 | 6,18 | 6,01 | 5,78 | 5,49 | | | | | |
| | | -- | 25 | 100 | Q | 21280 | 18410 | 15700 | 13190 | 10900 | 8870 | 7100 | | | | |
| | | | | | P | 5,73 | 5,77 | 5,73 | 5,62 | 5,44 | 5,21 | 4,92 | | | | |
| | | -- | 25 | 120 | Q | 21060 | 18160 | 15440 | 12920 | 10640 | 8610 | | | | | |
| | | | | | P | 6,87 | 6,78 | 6,62 | 6,39 | 6,11 | 5,78 | | | | | |
| | | -- | 25 | 140 | Q | 20880 | 17990 | 15270 | 12770 | | | | | | | |
| | | | | | P | 7,97 | 7,78 | 7,52 | 7,22 | | | | | | | |
| | CD700M | 0 | -- | (34,9) | Q | | | | | | 16750 | 13950 | 11490 | 9360 | 7590 | 6160 |
| | | | | | P | | | | | | 1,93 | 2,16 | 2,31 | 2,39 | 2,40 | 2,37 |
| | | 5 | -- | (39,7) | Q | | | | | 18480 | 15540 | 12900 | 10570 | 8580 | 6910 | 5580 |
| | | | | | P | | | | | 2,14 | 2,40 | 2,58 | 2,68 | 2,70 | 2,68 | 2,60 |
| | | 10 | -- | (45,0) | Q | | | 23350 | 20080 | 17050 | 14290 | 11820 | 9650 | 7780 | 6230 | 4990 |
| | | | | | P | | | 1,97 | 2,37 | 2,67 | 2,87 | 2,99 | 3,03 | 3,00 | 2,93 | 2,81 |
| | | 15 | -- | (50,9) | Q | | | 21420 | 18380 | 15570 | 13010 | 10710 | 8700 | 6970 | 5540 | 4400 |
| | | | | | P | | | 2,63 | 2,96 | 3,18 | 3,32 | 3,37 | 3,36 | 3,28 | 3,16 | 2,99 |
| | | 20 | -- | (57,3) | Q | | | 19350 | 16580 | 14000 | 11660 | 9560 | 7720 | 6140 | 4840 | |
| | | | | | P | | | 3,27 | 3,52 | 3,68 | 3,74 | 3,73 | 3,66 | 3,53 | 3,35 | |
| | | 25 | -- | (64,3) | Q | | | 17040 | 14570 | 12270 | 10180 | 8300 | 6660 | 5260 | 4110 | |
| | | | | | P | | | 3,89 | 4,06 | 4,14 | 4,14 | 4,06 | 3,93 | 3,74 | 3,52 | |
| | | -- | 30 | 75 | Q | | | 14860 | 12660 | 10620 | 8760 | 7090 | 5640 | 4400 | | |
| | | | | | P | | | 4,68 | 4,74 | 4,71 | 4,62 | 4,45 | 4,24 | 3,98 | | |
| | | -- | 35 | 90 | Q | | | 13520 | 11470 | 9560 | 7820 | 6280 | 4930 | | | |
| | | | | | P | | | 5,57 | 5,49 | 5,34 | 5,12 | 4,86 | 4,55 | | | |
| | | -- | 40 | 100 | Q | | | 11900 | 10070 | 8360 | 6810 | 5430 | | | | |
| | | | | | P | | | 6,06 | 5,91 | 5,69 | 5,41 | 5,09 | | | | |
| | | -- | 45 | 110 | Q | | | 10510 | 8870 | 7350 | 5960 | 4730 | | | | |
| | | | | | P | | | 6,53 | 6,30 | 6,02 | 5,69 | 5,32 | | | | |

- Funzionamento a 50 Hz
- Per funzionamento a 60 Hz, moltiplicare la resa per 1,18
- Le prestazioni si basano sulla norma europea EN12900
- Non miscelare mai olii estere con olii differenti

- Frequency rate 50 Hz
- For 60 Hz operation, data to be multiplied by 1,18
- Performance data are based on European Standard EN12900
- Never mix ester oils with different oils

- Fonctionnement à 50 Hz
- Pour le fonctionnement à 60 Hz, multiplier le rendement par 1,18
- Les données de puissance se basent sur la norme européenne EN 12900
- Ne mélanger jamais ester huiles avec different huiles

- Frequenz 50 Hz
- Für 60 Hz-Betrieb ist die Leistung mit 1,18 zu multiplizieren
- Leistungswerte basieren auf der europäischen Norm EN 12900
- Niemals Esteröl mit anderen Ölen vermischen

OFFICINE MARIO DORIN SINCE 1918
DORIN INNOVATION

# R744
# CO2
# (CD-M)
# (CD-H)

| Serie Range Serie Serie | Modello Model Modèle Typ | Condizioni operative Operating conditions Conditions d'utilisation Betriebsbedingungen | | | | Q [W] Capacità frigorifera Refrigerating capacity Puissance frigorifique Kälteleistung | | | | | P [kW] Potenza assorbita Power input Puissance absorbée Leistungsaufnahme | | | | | |
|---|---|---|---|---|---|---|---|---|---|---|---|---|---|---|---|---|
| | | Tc | Tgcout | pc | | Temperatura evaporazione / Evaporating temperature Température d'évaporation / Verdampfungstemperatur [°C] | | | | | | | | | | |
| | | [°C] | [°C] | [bar] | | +10 | +5 | 0 | -5 | -10 | -15 | -20 | -25 | -30 | -35 | -40 |
| CD300 | CD750H | 0 | -- | (34,9) | Q | | | | | | 16300 | 13600 | 11280 | 9350 | | |
| | | | | | P | | | | | | 1,91 | 2,14 | 2,29 | 2,36 | | |
| | | 5 | -- | (39,7) | Q | | | | | 18020 | 15120 | 12570 | 10380 | 8570 | | |
| | | | | | P | | | | | 2,11 | 2,38 | 2,55 | 2,65 | 2,68 | | |
| | | 10 | -- | (45,0) | Q | | | 23010 | 19680 | 16640 | 13920 | 11520 | 9470 | 7770 | | |
| | | | | | P | | | 1,95 | 2,34 | 2,64 | 2,84 | 2,97 | 3,01 | 2,99 | | |
| | | 15 | -- | (50,9) | Q | | 24450 | 21130 | 18040 | 15210 | 12680 | 10450 | 8550 | 6970 | | |
| | | | | | P | | 2,17 | 2,60 | 2,92 | 3,16 | 3,30 | 3,37 | 3,36 | 3,28 | | |
| | | 20 | -- | (57,3) | Q | 25380 | 22170 | 19130 | 16290 | 13700 | 11380 | 9340 | 7590 | 6150 | | |
| | | | | | P | 2,43 | 2,89 | 3,24 | 3,50 | 3,67 | 3,75 | 3,76 | 3,69 | 3,56 | | |
| | | 25 | -- | (64,3) | Q | 22440 | 19590 | 16880 | 14350 | 12030 | 9950 | 8120 | 6570 | 5280 | | |
| | | | | | P | 3,21 | 3,59 | 3,87 | 4,06 | 4,16 | 4,18 | 4,12 | 4,00 | 3,81 | | |
| | | -- | 30 | 75 | Q | 19720 | 17190 | 14780 | 12520 | 10450 | 8600 | 6970 | 5580 | 4450 | | |
| | | | | | P | 4,26 | 4,53 | 4,71 | 4,79 | 4,80 | 4,73 | 4,58 | 4,37 | 4,10 | | |
| | | -- | 35 | 90 | Q | 18180 | 15810 | 13540 | 11420 | 9480 | 7740 | 6220 | 4930 | | | |
| | | | | | P | 5,50 | 5,63 | 5,67 | 5,63 | 5,52 | 5,33 | 5,08 | 4,77 | | | |
| | | -- | 40 | 100 | Q | 16110 | 14010 | 11980 | 10090 | 8350 | 6790 | 5430 | | | | |
| | | | | | P | 6,20 | 6,25 | 6,22 | 6,11 | 5,92 | 5,67 | 5,36 | | | | |
| | | -- | 45 | 110 | Q | 14330 | 12460 | 10650 | 8950 | 7390 | 5990 | | | | | |
| | | | | | P | 6,85 | 6,82 | 6,72 | 6,54 | 6,30 | 5,99 | | | | | |
| | | -- | 25 | 100 | Q | 23100 | 19980 | 17040 | 14310 | 11820 | 9610 | 7680 | | | | |
| | | | | | P | 6,20 | 6,25 | 6,22 | 6,11 | 5,92 | 5,67 | 5,36 | | | | |
| | | -- | 25 | 120 | Q | 22850 | 19700 | 16740 | 13990 | 11500 | 9290 | | | | | |
| | | | | | P | 7,46 | 7,37 | 7,20 | 6,96 | 6,66 | 6,30 | | | | | |
| | | -- | 25 | 140 | Q | 22630 | 19470 | 16500 | 13770 | | | | | | | |
| | | | | | P | 8,65 | 8,46 | 8,19 | 7,86 | | | | | | | |
| | CD750M | 0 | -- | (34,9) | Q | | | | | | 19840 | 16500 | 13580 | 11080 | 9020 | 7390 |
| | | | | | P | | | | | | 2,30 | 2,59 | 2,78 | 2,88 | 2,92 | 2,90 |
| | | 5 | -- | (39,7) | Q | | | | | 21940 | 18410 | 15260 | 12500 | 10160 | 8220 | 6690 |
| | | | | | P | | | | | 2,56 | 2,88 | 3,10 | 3,23 | 3,27 | 3,26 | 3,19 |
| | | 10 | -- | (45,0) | Q | | | 27850 | 23900 | 20250 | 16940 | 13990 | 11410 | 9220 | 7410 | 5990 |
| | | | | | P | | | 2,36 | 2,85 | 3,21 | 3,45 | 3,60 | 3,66 | 3,65 | 3,57 | 3,46 |
| | | 15 | -- | (50,9) | Q | | | 25560 | 21890 | 18500 | 15430 | 12680 | 10290 | 8260 | 6590 | 5290 |
| | | | | | P | | | 3,16 | 3,56 | 3,83 | 4,00 | 4,07 | 4,07 | 3,99 | 3,86 | 3,69 |
| | | 20 | -- | (57,3) | Q | | | 23110 | 19750 | 16650 | 13830 | 11320 | 9130 | 7270 | 5760 | |
| | | | | | P | | | 3,95 | 4,25 | 4,44 | 4,52 | 4,52 | 4,44 | 4,30 | 4,11 | |
| | | 25 | -- | (64,3) | Q | | | 20360 | 17360 | 14590 | 12070 | 9830 | 7880 | 6220 | 4880 | |
| | | | | | P | | | 4,72 | 4,92 | 5,01 | 5,01 | 4,92 | 4,77 | 4,57 | 4,33 | |
| | | -- | 30 | 75 | Q | | | 17760 | 15090 | 12620 | 10380 | 8390 | 6660 | 5190 | | |
| | | | | | P | | | 5,70 | 5,76 | 5,72 | 5,60 | 5,41 | 5,16 | 4,87 | | |
| | | -- | 35 | 90 | Q | | | 16160 | 13660 | 11350 | 9260 | 7400 | 5790 | | | |
| | | | | | P | | | 6,82 | 6,70 | 6,50 | 6,23 | 5,91 | 5,54 | | | |
| | | -- | 40 | 100 | Q | | | 14210 | 11980 | 9920 | 8040 | 6380 | | | | |
| | | | | | P | | | 7,45 | 7,22 | 6,93 | 6,58 | 6,18 | | | | |
| | | -- | 45 | 110 | Q | | | 12540 | 10550 | 8700 | 7020 | 5530 | | | | |
| | | | | | P | | | 8,03 | 7,71 | 7,34 | 6,92 | 6,46 | | | | |
| | CD1000H | 0 | -- | (34,9) | Q | | | | | | 19910 | 16550 | 13680 | 11330 | | |
| | | | | | P | | | | | | 2,34 | 2,61 | 2,78 | 2,86 | | |
| | | 5 | -- | (39,7) | Q | | | | | 22060 | 18440 | 15280 | 12580 | 10380 | | |
| | | | | | P | | | | | 2,59 | 2,90 | 3,11 | 3,21 | 3,23 | | |
| | | 10 | -- | (45,0) | Q | | | 28310 | 24130 | 20330 | 16940 | 13980 | 11470 | 9410 | | |
| | | | | | P | | | 2,38 | 2,86 | 3,22 | 3,46 | 3,59 | 3,63 | 3,59 | | |
| | | 15 | -- | (50,9) | Q | | 30120 | 25940 | 22070 | 18550 | 15400 | 12660 | 10340 | 8440 | | |
| | | | | | P | | 2,64 | 3,17 | 3,56 | 3,84 | 4,00 | 4,06 | 4,03 | 3,93 | | |
| | | 20 | -- | (57,3) | Q | 31280 | 27240 | 23430 | 19890 | 16670 | 13790 | 11290 | 9170 | 7450 | | |
| | | | | | P | 2,95 | 3,51 | 3,94 | 4,25 | 4,44 | 4,52 | 4,5 | 4,41 | 4,23 | | |
| | | 25 | -- | (64,3) | Q | 27580 | 24010 | 20620 | 17460 | 14590 | 12030 | 9800 | 7920 | 6400 | | |
| | | | | | P | 3,91 | 4,37 | 4,70 | 4,91 | 5,01 | 5,01 | 4,92 | 4,74 | 4,50 | | |
| | | -- | 30 | 75 | Q | 24140 | 20980 | 17970 | 15180 | 12630 | 10350 | 8380 | 6720 | 5390 | | |
| | | | | | P | 5,17 | 5,48 | 5,67 | 5,75 | 5,72 | 5,61 | 5,41 | 5,13 | 4,80 | | |
| | | -- | 35 | 90 | Q | 22120 | 19170 | 16370 | 13760 | 11380 | 9270 | 7450 | 5920 | | | |
| | | | | | P | 6,61 | 6,74 | 6,75 | 6,66 | 6,49 | 6,23 | 5,90 | 5,50 | | | |
| | | -- | 40 | 100 | Q | 19520 | 16910 | 14420 | 12090 | 9980 | 8100 | 6480 | | | | |
| | | | | | P | 7,41 | 7,42 | 7,33 | 7,15 | 6,88 | 6,54 | 6,14 | | | | |
| | | -- | 45 | 110 | Q | 17290 | 14980 | 12760 | 10690 | 8800 | 7120 | | | | | |
| | | | | | P | 8,11 | 8,02 | 7,84 | 7,57 | 7,23 | 6,81 | | | | | |
| | | -- | 25 | 100 | Q | 28000 | 24130 | 20500 | 17150 | 14130 | 11460 | 9170 | | | | |
| | | | | | P | 7,41 | 7,42 | 7,33 | 7,15 | 6,88 | 6,54 | 6,14 | | | | |
| | | -- | 25 | 120 | Q | 27460 | 23580 | 19960 | 16630 | 13630 | 11010 | | | | | |
| | | | | | P | 8,74 | 8,56 | 8,3 | 7,96 | 7,54 | 7,07 | | | | | |
| | | -- | 25 | 140 | Q | 26950 | 23100 | 19510 | 16220 | | | | | | | |
| | | | | | P | 9,92 | 9,60 | 9,20 | 8,74 | | | | | | | |
| | CD1000M | 0 | -- | (34,9) | Q | | | | | | 24590 | 20470 | 16860 | 13770 | 11220 | 9200 |
| | | | | | P | | | | | | 2,85 | 3,20 | 3,44 | 3,57 | 3,61 | 3,58 |
| | | 5 | -- | (39,7) | Q | | | | | 27200 | 22830 | 18940 | 15530 | 12630 | 10230 | 8330 |
| | | | | | P | | | | | 3,17 | 3,57 | 3,84 | 3,99 | 4,05 | 4,03 | 3,94 |
| | | 10 | -- | (45,0) | Q | | | 34500 | 29620 | 25120 | 21030 | 17380 | 14180 | 11460 | 9220 | 7460 |
| | | | | | P | | | 2,91 | 3,52 | 3,96 | 4,27 | 4,45 | 4,53 | 4,51 | 4,42 | 4,27 |
| | | 15 | -- | (50,9) | Q | | | 31680 | 27140 | 22960 | 19160 | 15760 | 12800 | 10280 | 8210 | 6590 |
| | | | | | P | | | 3,90 | 4,40 | 4,74 | 4,95 | 5,04 | 5,03 | 4,94 | 4,77 | 4,56 |
| | | 20 | -- | (57,3) | Q | | | 28660 | 24510 | 20670 | 17180 | 14070 | 11360 | 9060 | 7170 | |
| | | | | | P | | | 4,87 | 5,25 | 5,48 | 5,59 | 5,58 | 5,49 | 5,32 | 5,08 | |
| | | 25 | -- | (64,3) | Q | | | 25260 | 21560 | 18130 | 15010 | 12230 | 9810 | 7760 | 6080 | |
| | | | | | P | | | 5,81 | 6,07 | 6,18 | 6,18 | 6,08 | 5,90 | 5,64 | 5,34 | |
| | | -- | 30 | 75 | Q | | | 22060 | 18760 | 15700 | 12920 | 10450 | 8290 | 6480 | | |
| | | | | | P | | | 7,02 | 7,10 | 7,06 | 6,91 | 6,67 | 6,37 | 6,00 | | |
| | | -- | 35 | 90 | Q | | | 20090 | 16990 | 14130 | 11530 | 9220 | 7220 | | | |
| | | | | | P | | | 8,38 | 8,25 | 8,00 | 7,67 | 7,28 | 6,82 | | | |
| | | -- | 40 | 100 | Q | | | 17680 | 14910 | 12350 | 10020 | 7960 | | | | |
| | | | | | P | | | 9,15 | 8,88 | 8,52 | 8,09 | 7,60 | | | | |
| | | -- | 45 | 110 | Q | | | 15610 | 13130 | 10830 | 8750 | 6900 | | | | |
| | | | | | P | | | 9,85 | 9,47 | 9,01 | 8,49 | 7,92 | | | | |

- Funzionamento a 50 Hz
- Per funzionamento a 60 Hz, moltiplicare la resa per 1,18
- Le prestazioni si basano sulla norma europea EN12900
- Non miscelare mai olii estere con olii differenti

- Frequency rate 50 Hz
- For 60 Hz operation, data to be multiplied by 1,18
- Performance data are based on European Standard EN12900
- Never mix ester oils with different oils

- Fonctionnement à 50 Hz
- Pour le fonctionnement à 60 Hz, multiplier le rendement par 1,18
- Les données de puissance se basent sur la norme européenne EN 12900
- Ne mélanger jamais ester huiles avec different huiles

- Frequenz 50 Hz
- Für 60 Hz-Betrieb ist die Leistung mit 1,18 zu multiplizieren
- Leistungswerte basieren auf der europäischen Norm EN 12900
- Niemals Esteröl mit anderen Ölen vermischen

# R744 CO2 (CD-M) (CD-H)

| Serie Range Serie Serie | Modello Model Modèle Typ | Condizioni operative Operating conditions Conditions d'utilisation Betriebsbedingungen | | | | Q [W] | | Capacità frigorifera Refrigerating capacity Puissance frigorifique Kälteleistung | | | P [kW] | | Potenza assorbita Power input Puissance absorbée Leistungsaufnahme | | | |
|---|---|---|---|---|---|---|---|---|---|---|---|---|---|---|---|---|
| | | Tc | Tgcout | pc | | Temperatura evaporazione / Evaporating temperature Température d'évaporation / Verdampfungstemperatur [°C] | | | | | | | | | | |
| | | [°C] | [°C] | [bar] | | +10 | +5 | 0 | -5 | -10 | -15 | -20 | -25 | -30 | -35 | -40 |
| CD300 | CD1200H | 0 | -- | (34,9) | Q | | | | | | 24640 | 20530 | 17010 | 14100 | | |
| | | | | | P | | | | | | 2,84 | 3,20 | 3,44 | 3,55 | | |
| | | 5 | -- | (39,7) | Q | | | | | 27260 | 22840 | 18970 | 15650 | 12910 | | |
| | | | | | P | | | | | 3,14 | 3,55 | 3,83 | 3,99 | 4,03 | | |
| | | 10 | -- | (45,0) | Q | | | 34830 | 29770 | 25140 | 21000 | 17380 | 14280 | 11720 | | |
| | | | | | P | | | 2,85 | 3,47 | 3,93 | 4,26 | 4,45 | 4,52 | 4,49 | | |
| | | 15 | -- | (50,9) | Q | | 37020 | 31960 | 27250 | 22960 | 19110 | 15750 | 12880 | 10510 | | |
| | | | | | P | | 3,18 | 3,85 | 4,36 | 4,72 | 4,95 | 5,05 | 5,04 | 4,92 | | |
| | | 20 | -- | (57,3) | Q | 38410 | 33520 | 28890 | 24590 | 20650 | 17130 | 14050 | 11430 | 9280 | | |
| | | | | | P | 3,56 | 4,27 | 4,83 | 5,23 | 5,48 | 5,61 | 5,62 | 5,52 | 5,31 | | |
| | | 25 | -- | (64,3) | Q | 33910 | 29580 | 25460 | 21620 | 18110 | 14970 | 12220 | 9880 | 7960 | | |
| | | | | | P | 4,76 | 5,35 | 5,78 | 6,07 | 6,21 | 6,24 | 6,15 | 5,95 | 5,66 | | |
| | | -- | 30 | 75 | Q | 29730 | 25890 | 22240 | 18820 | 15700 | 12900 | 10460 | 8390 | 6700 | | |
| | | | | | P | 6,35 | 6,76 | 7,02 | 7,14 | 7,14 | 7,01 | 6,79 | 6,46 | 6,05 | | |
| | | -- | 35 | 90 | Q | 27320 | 23730 | 20300 | 17110 | 14190 | 11580 | 9310 | 7390 | | | |
| | | | | | P | 8,19 | 8,37 | 8,41 | 8,33 | 8,13 | 7,83 | 7,44 | 6,96 | | | |
| | | -- | 40 | 100 | Q | 24150 | 20970 | 17920 | 15070 | 12460 | 10130 | 8100 | | | | |
| | | | | | P | 9,21 | 9,26 | 9,17 | 8,97 | 8,66 | 8,26 | 7,76 | | | | |
| | | -- | 45 | 110 | Q | 21430 | 18610 | 15890 | 13340 | 11000 | 8920 | | | | | |
| | | | | | P | 10,13 | 10,05 | 9,84 | 9,53 | 9,12 | 8,62 | | | | | |
| | | -- | 25 | 100 | Q | 34640 | 29920 | 25480 | 21370 | 17650 | 14340 | 11480 | | | | |
| | | | | | P | 9,21 | 9,26 | 9,17 | 8,97 | 8,66 | 8,26 | 7,76 | | | | |
| | | -- | 25 | 120 | Q | 34090 | 29350 | 24890 | 20790 | 17080 | 13800 | | | | | |
| | | | | | P | 10,96 | 10,76 | 10,46 | 10,05 | 9,55 | 8,97 | | | | | |
| | | -- | 25 | 140 | Q | 33580 | 28850 | 24410 | 20340 | | | | | | | |
| | | | | | P | 12,53 | 12,15 | 11,68 | 11,12 | | | | | | | |
| | CD1100M | 0 | -- | (34,9) | Q | | | | | | 31530 | 26310 | 21720 | 17800 | 14530 | 11930 |
| | | | | | P | | | | | | 3,70 | 4,16 | 4,47 | 4,65 | 4,72 | 4,69 |
| | | 5 | -- | (39,7) | Q | | | | | 34850 | 29330 | 24390 | 20060 | 16350 | 13270 | 10820 |
| | | | | | P | | | | | 4,11 | 4,63 | 4,99 | 5,21 | 5,29 | 5,28 | 5,17 |
| | | 10 | -- | (45,0) | Q | | | 44120 | 37960 | 32260 | 27070 | 22430 | 18360 | 14870 | 11990 | 9700 |
| | | | | | P | | | 3,79 | 4,57 | 5,15 | 5,55 | 5,80 | 5,91 | 5,90 | 5,79 | 5,60 |
| | | 15 | -- | (50,9) | Q | | | 40600 | 34860 | 29550 | 24710 | 20390 | 16600 | 13360 | 10680 | 8560 |
| | | | | | P | | | 5,08 | 5,71 | 6,16 | 6,44 | 6,57 | 6,57 | 6,46 | 6,26 | 5,99 |
| | | 20 | -- | (57,3) | Q | | | 36810 | 31540 | 26660 | 22220 | 18240 | 14760 | 11790 | 9340 | |
| | | | | | P | | | 6,34 | 6,83 | 7,13 | 7,29 | 7,29 | 7,18 | 6,97 | 6,67 | |
| | | 25 | -- | (64,3) | Q | | | 32510 | 27800 | 23430 | 19450 | 15880 | 12760 | 10100 | 7910 | |
| | | | | | P | | | 7,57 | 7,90 | 8,06 | 8,07 | 7,96 | 7,73 | 7,40 | 7,01 | |
| | | -- | 30 | 75 | Q | | | 28470 | 24260 | 20350 | 16780 | 13600 | 10810 | 8430 | | |
| | | | | | P | | | 9,15 | 9,26 | 9,22 | 9,04 | 8,74 | 8,35 | 7,88 | | |
| | | -- | 35 | 90 | Q | | | 26020 | 22050 | 18370 | 15010 | 12010 | 9390 | | | |
| | | | | | P | | | 10,96 | 10,79 | 10,48 | 10,06 | 9,54 | 8,94 | | | |
| | | -- | 40 | 100 | Q | | | 22940 | 19380 | 16070 | 13050 | 10350 | | | | |
| | | | | | P | | | 11,98 | 11,64 | 11,17 | 10,61 | 9,96 | | | | |
| | | -- | 45 | 110 | Q | | | 20270 | 17070 | 14090 | 11370 | 8950 | | | | |
| | | | | | P | | | 12,91 | 12,42 | 11,82 | 11,13 | 10,36 | | | | |
| | CD1300H | 0 | -- | (34,9) | Q | | | | | | 32160 | 26770 | 22150 | 18330 | | |
| | | | | | P | | | | | | 3,71 | 4,17 | 4,46 | 4,61 | | |
| | | 5 | -- | (39,7) | Q | | | | | 35550 | 29760 | 24690 | 20340 | 16750 | | |
| | | | | | P | | | | | 4,10 | 4,62 | 4,98 | 5,17 | 5,23 | | |
| | | 10 | -- | (45,0) | Q | | | 45420 | 38790 | 32740 | 27320 | 22570 | 18520 | 15180 | | |
| | | | | | P | | | 3,76 | 4,54 | 5,12 | 5,53 | 5,78 | 5,87 | 5,81 | | |
| | | 15 | -- | (50,9) | Q | | 48220 | 41600 | 35450 | 29840 | 24810 | 20420 | 16670 | 13590 | | |
| | | | | | P | | 4,20 | 5,04 | 5,68 | 6,14 | 6,42 | 6,54 | 6,52 | 6,37 | | |
| | | 20 | -- | (57,3) | Q | 49980 | 43590 | 37550 | 31930 | 26790 | 22200 | 18190 | 14780 | 11980 | | |
| | | | | | P | 4,73 | 5,62 | 6,30 | 6,80 | 7,12 | 7,27 | 7,27 | 7,13 | 6,87 | | |
| | | 25 | -- | (64,3) | Q | 44060 | 38400 | 33030 | 28030 | 23450 | 19360 | 15790 | 12750 | 10270 | | |
| | | | | | P | 6,28 | 7,00 | 7,53 | 7,88 | 8,05 | 8,07 | 7,95 | 7,69 | 7,32 | | |
| | | -- | 30 | 75 | Q | 38540 | 33550 | 28790 | 24350 | 20290 | 16660 | 13500 | 10820 | 8650 | | |
| | | | | | P | 8,32 | 8,81 | 9,11 | 9,25 | 9,22 | 9,06 | 8,76 | 8,34 | 7,81 | | |
| | | -- | 35 | 90 | Q | 35340 | 30680 | 26230 | 22090 | 18310 | 14940 | 12020 | 9560 | | | |
| | | | | | P | 10,67 | 10,86 | 10,89 | 10,76 | 10,49 | 10,10 | 9,58 | 8,97 | | | |
| | | -- | 40 | 100 | Q | 31210 | 27090 | 23140 | 19450 | 16090 | 13090 | 10490 | | | | |
| | | | | | P | 11,97 | 11,99 | 11,85 | 11,57 | 11,16 | 10,63 | 10,00 | | | | |
| | | -- | 45 | 110 | Q | 27680 | 24020 | 20510 | 17230 | 14220 | 11550 | | | | | |
| | | | | | P | 13,12 | 12,98 | 12,69 | 12,28 | 11,74 | 11,11 | | | | | |
| | | -- | 25 | 100 | Q | 44760 | 38650 | 32900 | 27590 | 22790 | 18530 | 14850 | | | | |
| | | | | | P | 11,97 | 11,99 | 11,85 | 11,57 | 11,16 | 10,63 | 10,00 | | | | |
| | | -- | 25 | 120 | Q | 44020 | 37900 | 32160 | 26880 | 22130 | 17930 | | | | | |
| | | | | | P | 14,17 | 13,89 | 13,47 | 12,94 | 12,30 | 11,57 | | | | | |
| | | -- | 25 | 140 | Q | 43400 | 37330 | 31650 | 26440 | | | | | | | |
| | | | | | P | 16,17 | 15,66 | 15,04 | 14,33 | | | | | | | |
| | CD1300M | 0 | -- | (34,9) | Q | | | | | | 35820 | 29840 | 24620 | 20170 | 16510 | 13630 |
| | | | | | P | | | | | | 4,10 | 4,62 | 4,97 | 5,17 | 5,26 | 5,24 |
| | | 5 | -- | (39,7) | Q | | | | | 39630 | 33300 | 27670 | 22750 | 18560 | 15120 | 12430 |
| | | | | | P | | | | | 4,54 | 5,14 | 5,54 | 5,79 | 5,89 | 5,88 | 5,79 |
| | | 10 | -- | (45,0) | Q | | | 50270 | 43180 | 36650 | 30720 | 25440 | 20840 | 16930 | 13720 | 11220 |
| | | | | | P | | | 4,12 | 5,02 | 5,70 | 6,16 | 6,45 | 6,58 | 6,58 | 6,48 | 6,30 |
| | | 15 | -- | (50,9) | Q | | | 46210 | 39630 | 33560 | 28050 | 23150 | 18890 | 15270 | 12310 | 10010 |
| | | | | | P | | | 5,56 | 6,31 | 6,83 | 7,16 | 7,31 | 7,33 | 7,22 | 7,03 | 6,76 |
| | | 20 | -- | (57,3) | Q | | | 41860 | 35830 | 30280 | 25240 | 20750 | 16850 | 13550 | 10850 | |
| | | | | | P | | | 6,98 | 7,56 | 7,93 | 8,11 | 8,14 | 8,03 | 7,82 | 7,52 | |
| | | 25 | -- | (64,3) | Q | | | 36950 | 31590 | 26620 | 22120 | 18120 | 14640 | 11700 | 9310 | |
| | | | | | P | | | 8,37 | 8,77 | 8,98 | 9,01 | 8,90 | 8,67 | 8,35 | 7,96 | |
| | | -- | 30 | 75 | Q | | | 32360 | 27590 | 23170 | 19170 | 15610 | 12520 | 9920 | | |
| | | | | | P | | | 10,16 | 10,32 | 10,31 | 10,14 | 9,84 | 9,45 | 8,98 | | |
| | | -- | 35 | 90 | Q | | | 29620 | 25160 | 21030 | 17290 | 13980 | 11120 | | | |
| | | | | | P | | | 12,23 | 12,09 | 11,80 | 11,39 | 10,88 | 10,29 | | | |
| | | -- | 40 | 100 | Q | | | 26180 | 22190 | 18500 | 15160 | 12210 | | | | |
| | | | | | P | | | 13,43 | 13,11 | 12,66 | 12,11 | 11,48 | | | | |
| | | -- | 45 | 110 | Q | | | 23220 | 19660 | 16350 | 13360 | 10720 | | | | |
| | | | | | P | | | 14,55 | 14,08 | 13,50 | 12,83 | 12,10 | | | | |

- Funzionamento a 50 Hz
- Per funzionamento a 60 Hz, moltiplicare la resa per 1,18
- Le prestazioni si basano sulla norma europea EN12900
- Non miscelare mai olii estere con olii differenti

- Frequency rate 50 Hz
- For 60 Hz operation, data to be multiplied by 1,18
- Performance data are based on European Standard EN12900
- Never mix ester oils with different oils

- Fonctionnement à 50 Hz
- Pour le fonctionnement à 60 Hz, multiplier le rendement par 1,18
- Les données de puissance se basent sur la norme européenne EN 12900
- Ne mélanger jamais ester huiles avec different huiles

- Frequenz 50 Hz
- Für 60 Hz-Betrieb ist die Leistung mit 1,18 zu multiplizieren
- Leistungswerte basieren auf der europäischen Norm EN 12900
- Niemals Esteröl mit anderen Ölen vermischen

OFFICINE MARIO DORIN SINCE 1918
DORIN INNOVATION

# R744
# CO2
# (CD-M)
# (CD-H)

| Serie / Range / Serie / Serie | Modello / Model / Modèle / Typ | Condizioni operative / Operating conditions / Conditions d'utilisation / Betriebsbedingungen | | | | Q [W] | | Capacità frigorifera / Refrigerating capacity / Puissance frigorifique / Kälteleistung | | | P [kW] | | Potenza assorbita / Power input / Puissance absorbée / Leistungsaufnahme | | | |
|---|---|---|---|---|---|---|---|---|---|---|---|---|---|---|---|---|
| | | | | | | Temperatura evaporazione / Evaporating temperature / Température d'évaporation / Verdampfungstemperatur [°C] | | | | | | | | | | |
| | | Tc [°C] | Tgcout [°C] | pc [bar] | | +10 | +5 | 0 | -5 | -10 | -15 | -20 | -25 | -30 | -35 | -40 |
| | CD1500H | 0 | -- | (34,9) | Q | | | | | | 36680 | 30580 | 25360 | 21040 | | |
| | | | | | P | | | | | | 4,26 | 4,76 | 5,08 | 5,24 | | |
| | | 5 | -- | (39,7) | Q | | | | | 40540 | 33990 | 28250 | 23340 | 19300 | | |
| | | | | | P | | | | | 4,71 | 5,28 | 5,67 | 5,88 | 5,94 | | |
| | | 10 | -- | (45,0) | Q | | | 51740 | 44230 | 37370 | 31250 | 25880 | 21310 | 17550 | | |
| | | | | | P | | | 4,37 | 5,22 | 5,86 | 6,30 | 6,57 | 6,67 | 6,63 | | |
| | | 15 | -- | (50,9) | Q | | 54940 | 47430 | 40460 | 34110 | 28440 | 23480 | 19250 | 15790 | | |
| | | | | | P | | 4,88 | 5,79 | 6,49 | 6,99 | 7,31 | 7,45 | 7,44 | 7,29 | | |
| | | 20 | -- | (57,3) | Q | 56940 | 49700 | 42860 | 36490 | 30690 | 25510 | 20980 | 17140 | 14000 | | |
| | | | | | P | 5,46 | 6,43 | 7,19 | 7,74 | 8,10 | 8,29 | 8,31 | 8,18 | 7,91 | | |
| | | 25 | -- | (64,3) | Q | 50230 | 43830 | 37750 | 32090 | 26920 | 22310 | 18280 | 14870 | 12100 | | |
| | | | | | P | 7,17 | 7,97 | 8,56 | 8,96 | 9,18 | 9,22 | 9,12 | 8,87 | 8,49 | | |
| | | -- | 30 | 75 | Q | 44000 | 38350 | 32970 | 27960 | 23380 | 19300 | 15740 | 12740 | 10310 | | |
| | | | | | P | 9,43 | 9,99 | 10,36 | 10,55 | 10,57 | 10,43 | 10,15 | 9,73 | 9,20 | | |
| | | -- | 35 | 90 | Q | 40430 | 35170 | 30160 | 25490 | 21240 | 17450 | 14170 | 11420 | | | |
| | | | | | P | 12,08 | 12,35 | 12,44 | 12,37 | 12,15 | 11,78 | 11,30 | 10,70 | | | |
| | | -- | 40 | 100 | Q | 35770 | 31120 | 26670 | 22530 | 18740 | 15380 | 12470 | | | | |
| | | | | | P | 13,58 | 13,68 | 13,62 | 13,4 | 13,04 | 12,56 | 11,96 | | | | |
| | | -- | 45 | 110 | Q | 31780 | 27670 | 23720 | 20030 | 16660 | 13660 | | | | | |
| | | | | | P | 14,95 | 14,90 | 14,70 | 14,36 | 13,89 | 13,30 | | | | | |
| | | -- | 25 | 100 | Q | 51290 | 44400 | 37920 | 31950 | 26550 | 21770 | 17660 | | | | |
| | | | | | P | 13,58 | 13,68 | 13,62 | 13,4 | 13,04 | 12,56 | 11,96 | | | | |
| | | -- | 25 | 120 | Q | 50650 | 43760 | 37310 | 31390 | 26060 | 21370 | | | | | |
| | | | | | P | 16,24 | 16,06 | 15,74 | 15,29 | 14,73 | 14,07 | | | | | |
| | | -- | 25 | 140 | Q | 50180 | 43360 | 36990 | 31160 | | | | | | | |
| | | | | | P | 18,80 | 18,43 | 17,94 | 17,35 | | | | | | | |
| CD300 | CD1400M | 0 | -- | (34,9) | Q | | | | | | 41880 | 34940 | 28860 | 23680 | 19400 | 16030 |
| | | | | | P | | | | | | 4,75 | 5,40 | 5,83 | 6,10 | 6,22 | 6,22 |
| | | 5 | -- | (39,7) | Q | | | | | 46270 | 38930 | 32390 | 26670 | 21800 | 17780 | 14630 |
| | | | | | P | | | | | 5,25 | 5,99 | 6,49 | 6,81 | 6,96 | 6,97 | 6,88 |
| | | 10 | -- | (45,0) | Q | | | 58560 | 50360 | 42790 | 35910 | 29790 | 24440 | 19890 | 16150 | 13220 |
| | | | | | P | | | 4,71 | 5,80 | 6,62 | 7,20 | 7,57 | 7,75 | 7,78 | 7,69 | 7,50 |
| | | 15 | -- | (50,9) | Q | | | 53810 | 46190 | 39170 | 32790 | 27100 | 22150 | 17940 | 14490 | 11800 |
| | | | | | P | | | 6,41 | 7,31 | 7,96 | 8,38 | 8,60 | 8,65 | 8,55 | 8,35 | 8,06 |
| | | 20 | -- | (57,3) | Q | | | 48730 | 41760 | 35330 | 29490 | 24290 | 19760 | 15920 | 12790 | |
| | | | | | P | | | 8,07 | 8,79 | 9,26 | 9,51 | 9,58 | 9,48 | 9,27 | 8,95 | |
| | | 25 | -- | (64,3) | Q | | | 43000 | 36790 | 31050 | 25840 | 21200 | 17160 | 13750 | 10980 | |
| | | | | | P | | | 9,70 | 10,22 | 10,50 | 10,58 | 10,49 | 10,26 | 9,91 | 9,48 | |
| | | -- | 30 | 75 | Q | | | 37620 | 32100 | 27000 | 22370 | 18250 | 14670 | 11660 | | |
| | | | | | P | | | 11,81 | 12,04 | 12,07 | 11,92 | 11,61 | 11,19 | 10,68 | | |
| | | -- | 35 | 90 | Q | | | 34380 | 29230 | 24460 | 20140 | 16320 | 13010 | | | |
| | | | | | P | | | 14,22 | 14,11 | 13,82 | 13,39 | 12,83 | 12,19 | | | |
| | | -- | 40 | 100 | Q | | | 30340 | 25740 | 21490 | 17640 | 14220 | | | | |
| | | | | | P | | | 15,60 | 15,29 | 14,82 | 14,23 | 13,54 | | | | |
| | | -- | 45 | 110 | Q | | | 26870 | 22770 | 18960 | 15520 | 12470 | | | | |
| | | | | | P | | | 16,90 | 16,41 | 15,79 | 15,06 | 14,26 | | | | |
| | CD1900H | 0 | -- | (34,9) | Q | | | | | | 42030 | 35060 | 29100 | 24170 | | |
| | | | | | P | | | | | | 4,88 | 5,48 | 5,88 | 6,09 | | |
| | | 5 | -- | (39,7) | Q | | | | | 46400 | 38930 | 32380 | 26790 | 22180 | | |
| | | | | | P | | | | | 5,40 | 6,08 | 6,56 | 6,84 | 6,94 | | |
| | | 10 | -- | (45,0) | Q | | | 59130 | 50570 | 42760 | 35780 | 29680 | 24470 | 20200 | | |
| | | | | | P | | | 5,01 | 5,99 | 6,74 | 7,29 | 7,63 | 7,78 | 7,77 | | |
| | | 15 | -- | (50,9) | Q | | 62720 | 54180 | 46250 | 39020 | 32570 | 26930 | 22130 | 18200 | | |
| | | | | | P | | 5,60 | 6,66 | 7,47 | 8,07 | 8,47 | 8,68 | 8,71 | 8,57 | | |
| | | 20 | -- | (57,3) | Q | 64950 | 56720 | 48930 | 41700 | 35110 | 29220 | 24090 | 19730 | 16180 | | |
| | | | | | P | 6,30 | 7,41 | 8,29 | 8,94 | 9,38 | 9,63 | 9,70 | 9,60 | 9,35 | | |
| | | 25 | -- | (64,3) | Q | 57270 | 49990 | 43090 | 36670 | 30810 | 25580 | 21020 | 17170 | 14040 | | |
| | | | | | P | 8,29 | 9,20 | 9,89 | 10,38 | 10,66 | 10,76 | 10,69 | 10,46 | 10,08 | | |
| | | -- | 30 | 75 | Q | 50130 | 43730 | 37640 | 31970 | 26790 | 22180 | 18170 | 14790 | 12060 | | |
| | | | | | P | 10,91 | 11,57 | 12,01 | 12,25 | 12,32 | 12,21 | 11,95 | 11,54 | 11,01 | | |
| | | -- | 35 | 90 | Q | 46070 | 40130 | 34470 | 29210 | 24420 | 20160 | 16480 | 13400 | | | |
| | | | | | P | 14,00 | 14,32 | 14,46 | 14,43 | 14,23 | 13,89 | 13,41 | 12,81 | | | |
| | | -- | 40 | 100 | Q | 40790 | 35550 | 30540 | 25880 | 21630 | 17860 | 14600 | | | | |
| | | | | | P | 15,76 | 15,90 | 15,87 | 15,68 | 15,34 | 14,87 | 14,28 | | | | |
| | | -- | 45 | 110 | Q | 36280 | 31660 | 27220 | 23080 | 19310 | 15960 | | | | | |
| | | | | | P | 17,37 | 17,35 | 17,18 | 16,86 | 16,40 | 15,83 | | | | | |
| | | -- | 25 | 100 | Q | 58490 | 50720 | 43420 | 36700 | 30640 | 25280 | 20680 | | | | |
| | | | | | P | 15,76 | 15,90 | 15,87 | 15,68 | 15,34 | 14,87 | 14,28 | | | | |
| | | -- | 25 | 120 | Q | 57920 | 50190 | 42960 | 36320 | 30370 | 25150 | | | | | |
| | | | | | P | 18,90 | 18,74 | 18,45 | 18,02 | 17,48 | 16,84 | | | | | |
| | | -- | 25 | 140 | Q | 57640 | 50020 | 42920 | 36440 | | | | | | | |
| | | | | | P | 21,97 | 21,62 | 21,17 | 20,61 | | | | | | | |
| CD400 | CD1200M | 0 | -- | (34,9) | Q | | | | | | 32940 | 27410 | 22620 | 18580 | 15310 | 12790 |
| | | | | | P | | | | | | 3,70 | 4,20 | 4,54 | 4,74 | 4,84 | 4,86 |
| | | 5 | -- | (39,7) | Q | | | | | 36610 | 30700 | 25460 | 20920 | 17100 | 14000 | 11620 |
| | | | | | P | | | | | 4,10 | 4,67 | 5,05 | 5,29 | 5,41 | 5,42 | 5,36 |
| | | 10 | -- | (45,0) | Q | | | 46810 | 40100 | 33940 | 28380 | 23440 | 19170 | 15570 | 12660 | 10430 |
| | | | | | P | | | 3,71 | 4,55 | 5,18 | 5,62 | 5,89 | 6,03 | 6,04 | 5,97 | 5,83 |
| | | 15 | -- | (50,9) | Q | | | 43150 | 36900 | 31150 | 25950 | 21340 | 17350 | 14000 | 11280 | 9210 |
| | | | | | P | | | 5,07 | 5,76 | 6,25 | 6,55 | 6,70 | 6,72 | 6,63 | 6,46 | 6,24 |
| | | 20 | -- | (57,3) | Q | | | 39190 | 33440 | 28150 | 23360 | 19120 | 15440 | 12350 | 9850 | |
| | | | | | P | | | 6,42 | 6,95 | 7,28 | 7,44 | 7,46 | 7,36 | 7,16 | 6,90 | |
| | | 25 | -- | (64,3) | Q | | | 34680 | 29530 | 24770 | 20470 | 16650 | 13350 | 10570 | 8330 | |
| | | | | | P | | | 7,75 | 8,10 | 8,27 | 8,28 | 8,16 | 7,94 | 7,62 | 7,25 | |
| | | -- | 30 | 75 | Q | | | 30430 | 25810 | 21540 | 17670 | 14240 | 11270 | 8780 | | |
| | | | | | P | | | 9,48 | 9,59 | 9,53 | 9,32 | 9,01 | 8,60 | 8,13 | | |
| | | -- | 35 | 90 | Q | | | 27860 | 23480 | 19430 | 15770 | 12520 | 9720 | | | |
| | | | | | P | | | 11,52 | 11,30 | 10,93 | 10,45 | 9,87 | 9,23 | | | |
| | | -- | 40 | 100 | Q | | | 24560 | 20620 | 16970 | 13660 | 10730 | | | | |
| | | | | | P | | | 12,70 | 12,27 | 11,71 | 11,06 | 10,33 | | | | |
| | | -- | 45 | 110 | Q | | | 21690 | 18130 | 14840 | 11850 | 9200 | | | | |
| | | | | | P | | | 13,80 | 13,18 | 12,44 | 11,63 | 10,76 | | | | |

- Funzionamento a 50 Hz
- Per funzionamento a 60 Hz, moltiplicare la resa per 1,18
- Le prestazioni si basano sulla norma europea EN12900
- Non miscelare mai olii estere con olii differenti

- Frequency rate 50 Hz
- For 60 Hz operation, data to be multiplied by 1,18
- Performance data are based on European Standard EN12900
- Never mix ester oils with different oils

- Fonctionnement à 50 Hz
- Pour le fonctionnement à 60 Hz, multiplier le rendement par 1,18
- Les données de puissance se basent sur la norme européenne EN 12900
- Ne mélanger jamais ester huiles avec different huiles

- Frequenz 50 Hz
- Für 60 Hz-Betrieb ist die Leistung mit 1,18 zu multiplizieren
- Leistungswerte basieren auf der europäischen Norm EN 12900
- Niemals Esteröl mit anderen Ölen vermischen

# R744 CO2 (CD-M) (CD-H)

| Serie / Range / Serie / Serie | Modello / Model / Modèle / Typ | Condizioni operative / Operating conditions / Conditions d'utilisation / Betriebsbedingungen | | | | Q [W] — Capacità frigorifera / Refrigerating capacity / Puissance frigorifique / Kälteleistung | | | | | P [kW] — Potenza assorbita / Power input / Puissance absorbée / Leistungsaufnahme | | | | | |
|---|---|---|---|---|---|---|---|---|---|---|---|---|---|---|---|---|
| | | Tc | Tgcout | pc | | Temperatura evaporazione / Evaporating temperature / Température d'évaporation / Verdampfungstemperatur [°C] | | | | | | | | | | |
| | | [°C] | [°C] | [bar] | | +10 | +5 | 0 | -5 | -10 | -15 | -20 | -25 | -30 | -35 | -40 |
| CD400 | CD1400H | 0 | -- | (34,9) | Q | | | | | | 32690 | 27290 | 22650 | 18780 | | |
| | | | | | P | | | | | | 3,79 | 4,26 | 4,57 | 4,71 | | |
| | | 5 | -- | (39,7) | Q | | | | | 36100 | 30310 | 25210 | 20830 | 17180 | | |
| | | | | | P | | | | | 4,20 | 4,73 | 5,10 | 5,30 | 5,36 | | |
| | | 10 | -- | (45,0) | Q | | | 45990 | 39370 | 33320 | 27890 | 23100 | 19000 | 15580 | | |
| | | | | | P | | | 3,87 | 4,66 | 5,25 | 5,67 | 5,93 | 6,03 | 5,98 | | |
| | | 15 | -- | (50,9) | Q | | 48840 | 42230 | 36080 | 30450 | 25390 | 20940 | 17130 | 13970 | | |
| | | | | | P | | 4,33 | 5,17 | 5,83 | 6,30 | 6,60 | 6,74 | 6,73 | 6,57 | | |
| | | 20 | -- | (57,3) | Q | 50640 | 44270 | 38220 | 32580 | 27420 | 22780 | 18700 | 15210 | 12320 | | |
| | | | | | P | 4,87 | 5,76 | 6,46 | 6,98 | 7,32 | 7,50 | 7,52 | 7,39 | 7,12 | | |
| | | 25 | -- | (64,3) | Q | 44770 | 39110 | 33720 | 28690 | 24070 | 19920 | 16270 | 13150 | 10570 | | |
| | | | | | P | 6,44 | 7,18 | 7,73 | 8,11 | 8,31 | 8,36 | 8,25 | 8,00 | 7,62 | | |
| | | -- | 30 | 75 | Q | 39330 | 34320 | 29520 | 25030 | 20910 | 17210 | 13960 | 11180 | 8890 | | |
| | | | | | P | 8,53 | 9,05 | 9,40 | 9,57 | 9,59 | 9,45 | 9,17 | 8,75 | 8,22 | | |
| | | -- | 35 | 90 | Q | 36270 | 31570 | 27060 | 22850 | 18980 | 15510 | 12470 | 9880 | | | |
| | | | | | P | 10,99 | 11,24 | 11,33 | 11,25 | 11,03 | 10,67 | 10,17 | 9,55 | | | |
| | | -- | 40 | 100 | Q | 32160 | 27980 | 23960 | 20190 | 16730 | 13620 | 10890 | | | | |
| | | | | | P | 12,40 | 12,49 | 12,42 | 12,20 | 11,84 | 11,34 | 10,73 | | | | |
| | | -- | 45 | 110 | Q | 28620 | 24910 | 21320 | 17940 | 14830 | 12040 | | | | | |
| | | | | | P | 13,69 | 13,63 | 13,42 | 13,07 | 12,59 | 11,98 | | | | | |
| | | -- | 25 | 100 | Q | 46120 | 39920 | 34070 | 28640 | 23690 | 19280 | 15430 | | | | |
| | | | | | P | 12,4 | 12,49 | 12,42 | 12,2 | 11,84 | 11,34 | 10,73 | | | | |
| | | -- | 25 | 120 | Q | 45690 | 39430 | 33530 | 28080 | 23120 | 18720 | | | | | |
| | | | | | P | 14,9 | 14,71 | 14,38 | 13,92 | 13,32 | 12,61 | | | | | |
| | | -- | 25 | 140 | Q | 45340 | 39070 | 33180 | 27740 | | | | | | | |
| | | | | | P | 17,31 | 16,91 | 16,38 | 15,73 | | | | | | | |
| | CD1500M | 0 | -- | (34,9) | Q | | | | | | 41390 | 34480 | 28460 | 23340 | 19140 | 15860 |
| | | | | | P | | | | | | 4,70 | 5,31 | 5,73 | 5,97 | 6,07 | 6,06 |
| | | 5 | -- | (39,7) | Q | | | | | 45890 | 38540 | 32000 | 26300 | 21460 | 17490 | 14400 |
| | | | | | P | | | | | 5,21 | 5,91 | 6,38 | 6,67 | 6,79 | 6,79 | 6,68 |
| | | 10 | -- | (45,0) | Q | | | 58430 | 50150 | 42520 | 35600 | 29450 | 24090 | 19540 | 15810 | 12920 |
| | | | | | P | | | 4,74 | 5,78 | 6,56 | 7,10 | 7,43 | 7,58 | 7,58 | 7,46 | 7,25 |
| | | 15 | -- | (50,9) | Q | | | 53810 | 46100 | 38990 | 32540 | 26800 | 21800 | 17560 | 14100 | 11410 |
| | | | | | P | | | 6,43 | 7,28 | 7,88 | 8,26 | 8,44 | 8,44 | 8,31 | 8,07 | 7,75 |
| | | 20 | -- | (57,3) | Q | | | 48840 | 41750 | 35210 | 29280 | 23990 | 19390 | 15500 | 12320 | |
| | | | | | P | | | 8,10 | 8,75 | 9,17 | 9,37 | 9,38 | 9,24 | 8,97 | 8,61 | |
| | | 25 | -- | (64,3) | Q | | | 43190 | 36840 | 30970 | 25650 | 20900 | 16770 | 13280 | 10430 | |
| | | | | | P | | | 9,73 | 10,18 | 10,40 | 10,41 | 10,26 | 9,96 | 9,55 | 9,05 | |
| | | -- | 30 | 75 | Q | | | 37870 | 32190 | 26930 | 22150 | 17890 | 14190 | 11070 | | |
| | | | | | P | | | 11,87 | 12,01 | 11,95 | 11,70 | 11,31 | 10,79 | 10,18 | | |
| | | -- | 35 | 90 | Q | | | 34660 | 29290 | 24310 | 19800 | 15780 | 12300 | | | |
| | | | | | P | | | 14,35 | 14,10 | 13,67 | 13,10 | 12,40 | 11,60 | | | |
| | | -- | 40 | 100 | Q | | | 30560 | 25740 | 21260 | 17200 | 13580 | | | | |
| | | | | | P | | | 15,78 | 15,29 | 14,64 | 13,87 | 12,99 | | | | |
| | | -- | 45 | 110 | Q | | | 27020 | 22680 | 18640 | 14960 | 11700 | | | | |
| | | | | | P | | | 17,12 | 16,41 | 15,56 | 14,60 | 13,56 | | | | |
| | CD2000H | 0 | -- | (34,9) | Q | | | | | | 41040 | 34290 | 28470 | 23600 | | |
| | | | | | P | | | | | | 4,71 | 5,30 | 5,69 | 5,89 | | |
| | | 5 | -- | (39,7) | Q | | | | | 45260 | 38030 | 31660 | 26170 | 21580 | | |
| | | | | | P | | | | | 5,21 | 5,88 | 6,34 | 6,62 | 6,70 | | |
| | | 10 | -- | (45,0) | Q | | | 57530 | 49300 | 41760 | 34980 | 28990 | 23840 | 19550 | | |
| | | | | | P | | | 4,81 | 5,76 | 6,51 | 7,05 | 7,39 | 7,53 | 7,49 | | |
| | | 15 | -- | (50,9) | Q | | 61030 | 52820 | 45160 | 38140 | 31830 | 26270 | 21490 | 17500 | | |
| | | | | | P | | 5,37 | 6,40 | 7,21 | 7,81 | 8,21 | 8,41 | 8,42 | 8,25 | | |
| | | 20 | -- | (57,3) | Q | 63230 | 55310 | 47790 | 40780 | 34340 | 28550 | 23450 | 19070 | 15420 | | |
| | | | | | P | 6,03 | 7,12 | 7,98 | 8,64 | 9,09 | 9,34 | 9,40 | 9,28 | 8,97 | | |
| | | 25 | -- | (64,3) | Q | 55900 | 48870 | 42170 | 35900 | 30140 | 24960 | 20390 | 16470 | 13220 | | |
| | | | | | P | 7,93 | 8,85 | 9,55 | 10,05 | 10,34 | 10,44 | 10,35 | 10,09 | 9,65 | | |
| | | -- | 30 | 75 | Q | 49110 | 42880 | 36920 | 31330 | 26190 | 21560 | 17490 | 14000 | 11120 | | |
| | | | | | P | 10,48 | 11,15 | 11,62 | 11,89 | 11,97 | 11,86 | 11,57 | 11,11 | 10,48 | | |
| | | -- | 35 | 90 | Q | 45310 | 39460 | 33860 | 28600 | 23780 | 19440 | 15630 | 12380 | | | |
| | | | | | P | 13,51 | 13,88 | 14,06 | 14,05 | 13,86 | 13,50 | 12,96 | 12,27 | | | |
| | | -- | 40 | 100 | Q | 40190 | 34990 | 29990 | 25290 | 20970 | 17080 | 13670 | | | | |
| | | | | | P | 15,27 | 15,47 | 15,49 | 15,32 | 14,97 | 14,46 | 13,78 | | | | |
| | | -- | 45 | 110 | Q | 35790 | 31170 | 26710 | 22490 | 18610 | 15120 | | | | | |
| | | | | | P | 16,91 | 16,96 | 16,82 | 16,51 | 16,03 | 15,39 | | | | | |
| | | -- | 25 | 100 | Q | 57630 | 49930 | 42640 | 35880 | 29700 | 24180 | 19360 | | | | |
| | | | | | P | 15,27 | 15,47 | 15,49 | 15,32 | 14,97 | 14,46 | 13,78 | | | | |
| | | -- | 25 | 120 | Q | 57170 | 49390 | 42050 | 35250 | 29060 | 23540 | | | | | |
| | | | | | P | 18,49 | 18,40 | 18,14 | 17,70 | 17,11 | 16,36 | | | | | |
| | | -- | 25 | 140 | Q | 56850 | 49050 | 41710 | 34930 | | | | | | | |
| | | | | | P | 21,73 | 21,43 | 20,96 | 20,35 | | | | | | | |
| | CD2000M | 0 | -- | (34,9) | Q | | | | | | 48020 | 40020 | 33040 | 27110 | 22240 | 18430 |
| | | | | | P | | | | | | 5,45 | 6,16 | 6,64 | 6,93 | 7,05 | 7,04 |
| | | 5 | -- | (39,7) | Q | | | | | 53240 | 44730 | 37150 | 30550 | 24930 | 20330 | 16740 |
| | | | | | P | | | | | 6,04 | 6,85 | 7,40 | 7,74 | 7,89 | 7,88 | 7,75 |
| | | 10 | -- | (45,0) | Q | | | 67760 | 58170 | 49340 | 41330 | 34200 | 27980 | 22700 | 18380 | 15010 |
| | | | | | P | | | 5,49 | 6,70 | 7,60 | 8,23 | 8,62 | 8,80 | 8,80 | 8,66 | 8,41 |
| | | 15 | -- | (50,9) | Q | | | 62430 | 53490 | 45260 | 37780 | 31130 | 25330 | 20410 | 16380 | 13260 |
| | | | | | P | | | 7,44 | 8,44 | 9,14 | 9,57 | 9,78 | 9,80 | 9,65 | 9,37 | 8,99 |
| | | 20 | -- | (57,3) | Q | | | 56680 | 48470 | 40890 | 34010 | 27880 | 22540 | 18020 | 14320 | |
| | | | | | P | | | 9,38 | 10,14 | 10,63 | 10,86 | 10,88 | 10,72 | 10,41 | 9,98 | |
| | | 25 | -- | (64,3) | Q | | | 50140 | 42780 | 35980 | 29800 | 24290 | 19500 | 15440 | 12120 | |
| | | | | | P | | | 11,27 | 11,79 | 12,05 | 12,07 | 11,89 | 11,55 | 11,08 | 10,50 | |
| | | -- | 30 | 75 | Q | | | 43980 | 37390 | 31290 | 25740 | 20800 | 16500 | 12860 | | |
| | | | | | P | | | 13,74 | 13,91 | 13,84 | 13,56 | 13,11 | 12,51 | 11,80 | | |
| | | -- | 35 | 90 | Q | | | 40270 | 34040 | 28260 | 23020 | 18350 | 14290 | | | |
| | | | | | P | | | 16,61 | 16,32 | 15,83 | 15,17 | 14,35 | 13,43 | | | |
| | | -- | 40 | 100 | Q | | | 35520 | 29920 | 24720 | 19990 | 15780 | | | | |
| | | | | | P | | | 18,25 | 17,70 | 16,95 | 16,05 | 15,02 | | | | |
| | | -- | 45 | 110 | Q | | | 31400 | 26360 | 21660 | 17390 | 13590 | | | | |
| | | | | | P | | | 19,80 | 18,98 | 18,00 | 16,88 | 15,66 | | | | |

- Funzionamento a 50 Hz
- Per funzionamento a 60 Hz, moltiplicare la resa per 1,18
- Le prestazioni si basano sulla norma europea EN12900
- Non miscelare mai olii estere con olii differenti

- Frequency rate 50 Hz
- For 60 Hz operation, data to be multiplied by 1,18
- Performance data are based on European Standard EN12900
- Never mix ester oils with different oils

- Fonctionnement à 50 Hz
- Pour le fonctionnement à 60 Hz, multiplier le rendement par 1,18
- Les données de puissance se basent sur la norme européenne EN 12900
- Ne mélanger jamais ester huiles avec different huiles

- Frequenz 50 Hz
- Für 60 Hz-Betrieb ist die Leistung mit 1,18 zu multiplizieren
- Leistungswerte basieren auf der europäischen Norm EN 12900
- Niemals Esteröl mit anderen Ölen vermischen

OFFICINE MARIO DORIN SINCE 1918
DORIN INNOVATION

# R744
# CO2
# (CD-M)
# (CD-H)

| Serie Range Serie Serie | Modello Model Modèle Typ | Condizioni operative Operating conditions Conditions d'utilisation Betriebsbedingungen | | | | Q [W] | | Capacità frigorifera Refrigerating capacity Puissance frigorifique Kälteleistung | | | P [kW] | | Potenza assorbita Power input Puissance absorbée Leistungsaufnahme | | | |
|---|---|---|---|---|---|---|---|---|---|---|---|---|---|---|---|---|
| | | | | | | Temperatura evaporazione / Evaporating temperature Température d'évaporation / Verdampfungstemperatur [°C] | | | | | | | | | | |
| | | Tc [°C] | Tgcout [°C] | pc [bar] | | +10 | +5 | 0 | -5 | -10 | -15 | -20 | -25 | -30 | -35 | -40 |
| CD400 | CD2400H | 0 | -- | (34,9) | Q | | | | | | 48970 | 40990 | 34090 | 28280 | | |
| | | | | | P | | | | | | 5,52 | 6,24 | 6,72 | 6,97 | | |
| | | 5 | -- | (39,7) | Q | | | | | 53930 | 45410 | 37860 | 31340 | 25860 | | |
| | | | | | P | | | | | 6,10 | 6,91 | 7,48 | 7,82 | 7,93 | | |
| | | 10 | -- | (45,0) | Q | | | 68350 | 58670 | 49780 | 41770 | 34680 | 28560 | 23430 | | |
| | | | | | P | | | 5,63 | 6,76 | 7,65 | 8,3 | 8,72 | 8,91 | 8,87 | | |
| | | 15 | -- | (50,9) | Q | | 72430 | 62780 | 53770 | 45500 | 38040 | 31440 | 25750 | 20980 | | |
| | | | | | P | | 6,31 | 7,51 | 8,47 | 9,19 | 9,68 | 9,94 | 9,97 | 9,78 | | |
| | | 20 | -- | (57,3) | Q | 74970 | 65680 | 56840 | 48580 | 40980 | 34130 | 28080 | 22850 | 18480 | | |
| | | | | | P | 7,11 | 8,37 | 9,38 | 10,17 | 10,71 | 11,03 | 11,12 | 10,99 | 10,64 | | |
| | | 25 | -- | (64,3) | Q | 66320 | 58070 | 50190 | 42800 | 36000 | 29860 | 24430 | 19750 | 15850 | | |
| | | | | | P | 9,36 | 10,42 | 11,25 | 11,84 | 12,20 | 12,34 | 12,25 | 11,95 | 11,44 | | |
| | | -- | 30 | 75 | Q | 58330 | 51010 | 43990 | 37400 | 31320 | 25830 | 20980 | 16800 | 13330 | | |
| | | | | | P | 12,36 | 13,15 | 13,71 | 14,04 | 14,14 | 14,03 | 13,71 | 13,17 | 12,43 | | |
| | | -- | 35 | 90 | Q | 53910 | 47030 | 40420 | 34210 | 28490 | 23330 | 18780 | 14870 | | | |
| | | | | | P | 15,96 | 16,41 | 16,63 | 16,63 | 16,42 | 16,01 | 15,39 | 14,56 | | | |
| | | -- | 40 | 100 | Q | 47880 | 41760 | 35860 | 30300 | 25160 | 20530 | 16440 | | | | |
| | | | | | P | 18,08 | 18,32 | 18,34 | 18,16 | 17,77 | 17,18 | 16,39 | | | | |
| | | -- | 45 | 110 | Q | 42700 | 37250 | 31970 | 26980 | 22360 | 18200 | | | | | |
| | | | | | P | 20,05 | 20,11 | 19,97 | 19,62 | 19,07 | 18,32 | | | | | |
| | | -- | 25 | 100 | Q | 68660 | 59590 | 50980 | 42970 | 35640 | 29060 | 23290 | | | | |
| | | | | | P | 18,08 | 18,32 | 18,34 | 18,16 | 17,77 | 17,18 | 16,39 | | | | |
| | | -- | 25 | 120 | Q | 68300 | 59110 | 50420 | 42350 | 34980 | 28380 | | | | | |
| | | | | | P | 21,97 | 21,87 | 21,58 | 21,08 | 20,4 | 19,52 | | | | | |
| | | -- | 25 | 140 | Q | 68120 | 58890 | 50180 | 42110 | | | | | | | |
| | | | | | P | 25,94 | 25,60 | 25,07 | 24,36 | | | | | | | |
| | CD2500H | 0 | -- | (34,9) | Q | | | | | | 55340 | 46270 | 38430 | 31870 | | |
| | | | | | P | | | | | | 6,29 | 7,10 | 7,64 | 7,92 | | |
| | | 5 | -- | (39,7) | Q | | | | | 60960 | 51270 | 42700 | 35310 | 29120 | | |
| | | | | | P | | | | | 6,96 | 7,87 | 8,52 | 8,90 | 9,02 | | |
| | | 10 | -- | (45,0) | Q | | | 77350 | 66330 | 56220 | 47120 | 39080 | 32160 | 26370 | | |
| | | | | | P | | | 6,43 | 7,72 | 8,72 | 9,45 | 9,92 | 10,14 | 10,10 | | |
| | | 15 | -- | (50,9) | Q | | 81970 | 70980 | 60730 | 51330 | 42870 | 35400 | 28970 | 23600 | | |
| | | | | | P | | 7,22 | 8,58 | 9,66 | 10,48 | 11,02 | 11,31 | 11,34 | 11,13 | | |
| | | 20 | -- | (57,3) | Q | 84850 | 74270 | 64210 | 54820 | 46200 | 38440 | 31590 | 25700 | 20790 | | |
| | | | | | P | 8,13 | 9,56 | 10,71 | 11,59 | 12,2 | 12,55 | 12,65 | 12,5 | 12,11 | | |
| | | 25 | -- | (64,3) | Q | 74990 | 65600 | 56640 | 48250 | 40540 | 33590 | 27470 | 22210 | 17830 | | |
| | | | | | P | 10,69 | 11,89 | 12,82 | 13,48 | 13,88 | 14,03 | 13,93 | 13,59 | 13,02 | | |
| | | -- | 30 | 75 | Q | 65870 | 57550 | 49580 | 42110 | 35230 | 29030 | 23570 | 18890 | 15010 | | |
| | | | | | P | 14,09 | 14,97 | 15,59 | 15,95 | 16,07 | 15,93 | 15,56 | 14,96 | 14,14 | | |
| | | -- | 35 | 90 | Q | 60780 | 52970 | 45490 | 38470 | 32020 | 26210 | 21110 | 16750 | | | |
| | | | | | P | 18,14 | 18,63 | 18,86 | 18,86 | 18,61 | 18,14 | 17,44 | 16,53 | | | |
| | | -- | 40 | 100 | Q | 53930 | 47000 | 40330 | 34050 | 28270 | 23070 | 18500 | | | | |
| | | | | | P | 20,5 | 20,75 | 20,77 | 20,55 | 20,1 | 19,43 | 18,55 | | | | |
| | | -- | 45 | 110 | Q | 48060 | 41900 | 35940 | 30320 | 25130 | 20460 | | | | | |
| | | | | | P | 22,69 | 22,74 | 22,56 | 22,15 | 21,53 | 20,69 | | | | | |
| | | -- | 25 | 100 | Q | 77340 | 67070 | 57340 | 48300 | 40050 | 32660 | 26200 | | | | |
| | | | | | P | 20,5 | 20,75 | 20,77 | 20,55 | 20,1 | 19,43 | 18,55 | | | | |
| | | -- | 25 | 120 | Q | 76840 | 66470 | 56670 | 47600 | 39330 | 31960 | | | | | |
| | | | | | P | 24,8 | 24,67 | 24,32 | 23,76 | 22,99 | 22,01 | | | | | |
| | | -- | 25 | 140 | Q | | | | | | | | | | | |
| | | | | | P | | | | | | | | | | | |
| | CD2500M | 0 | -- | (34,9) | Q | | | | | | 62530 | 52110 | 43020 | 35290 | 28950 | 24000 |
| | | | | | P | | | | | | 7,10 | 8,01 | 8,63 | 8,99 | 9,14 | 9,11 |
| | | 5 | -- | (39,7) | Q | | | | | 69330 | 58240 | 48370 | 39770 | 32460 | 26470 | 21790 |
| | | | | | P | | | | | 7,88 | 8,91 | 9,62 | 10,05 | 10,23 | 10,21 | 10,04 |
| | | 10 | -- | (45,0) | Q | | | 88250 | 75750 | 64250 | 53810 | 44520 | 36430 | 29560 | 23930 | 19550 |
| | | | | | P | | | 7,20 | 8,75 | 9,90 | 10,70 | 11,19 | 11,41 | 11,40 | 11,21 | 10,88 |
| | | 15 | -- | (50,9) | Q | | | 81290 | 69650 | 58920 | 49190 | 40520 | 32970 | 26570 | 21340 | 17270 |
| | | | | | P | | | 9,73 | 11,00 | 11,88 | 12,43 | 12,69 | 12,69 | 12,49 | 12,12 | 11,62 |
| | | 20 | -- | (57,3) | Q | | | 73800 | 63100 | 53230 | 44270 | 36290 | 29350 | 23460 | 18660 | |
| | | | | | P | | | 12,24 | 13,20 | 13,80 | 14,09 | 14,10 | 13,87 | 13,46 | 12,90 | |
| | | 25 | -- | (64,3) | Q | | | 65270 | 55690 | 46840 | 38790 | 31620 | 25380 | 20100 | 15800 | |
| | | | | | P | | | 14,69 | 15,33 | 15,63 | 15,64 | 15,39 | 14,93 | 14,31 | 13,55 | |
| | | -- | 30 | 75 | Q | | | 57250 | 48680 | 40730 | 33510 | 27080 | 21490 | 16760 | | |
| | | | | | P | | | 17,88 | 18,06 | 17,94 | 17,55 | 16,94 | 16,15 | 15,22 | | |
| | | -- | 35 | 90 | Q | | | 52410 | 44300 | 36790 | 29970 | 23900 | 18630 | | | |
| | | | | | P | | | 21,57 | 21,16 | 20,49 | 19,59 | 18,52 | 17,31 | | | |
| | | -- | 40 | 100 | Q | | | 46240 | 38950 | 32180 | 26030 | 20560 | | | | |
| | | | | | P | | | 23,69 | 22,92 | 21,91 | 20,71 | 19,36 | | | | |
| | | -- | 45 | 110 | Q | | | 40880 | 34320 | 28210 | 22660 | 17720 | | | | |
| | | | | | P | | | 25,67 | 24,56 | 23,24 | 21,77 | 20,17 | | | | |

- Funzionamento a 50 Hz
- Per funzionamento a 60 Hz, moltiplicare la resa per 1,18
- Le prestazioni si basano sulla norma europea EN12900
- Non miscelare mai olii estere con olii differenti

- Frequency rate 50 Hz
- For 60 Hz operation, data to be multiplied by 1,18
- Performance data are based on European Standard EN12900
- Never mix ester oils with different oils

- Fonctionnement à 50 Hz
- Pour le fonctionnement à 60 Hz, multiplier le rendement par 1,18
- Les données de puissance se basent sur la norme européenne EN 12900
- Ne mélanger jamais ester huiles avec different huiles

- Frequenz 50 Hz
- Für 60 Hz-Betrieb ist die Leistung mit 1,18 zu multiplizieren
- Leistungswerte basieren auf der europäischen Norm EN 12900
- Niemals Esteröl mit anderen Ölen vermischen

# R744 CO2 (CD-M) (CD-H)

| Serie / Range / Serie / Serie | Modello / Model / Modèle / Typ | Condizioni operative / Operating conditions / Conditions d'utilisation / Betriebsbedingungen | | | | Q [W] — Capacità frigorifera / Refrigerating capacity / Puissance frigorifique / Kälteleistung | | | | | P [kW] — Potenza assorbita / Power input / Puissance absorbée / Leistungsaufnahme | | | | | |
|---|---|---|---|---|---|---|---|---|---|---|---|---|---|---|---|---|
| | | | | | | Temperatura evaporazione / Evaporating temperature / Température d'évaporation / Verdampfungstemperatur [°C] | | | | | | | | | | |
| | | Tc [°C] | Tgcout [°C] | pc [bar] | | +10 | +5 | 0 | -5 | -10 | -15 | -20 | -25 | -30 | -35 | -40 |
| CD400 | CD3000H | 0 | -- | (34,9) | Q | | | | | | 63620 | 53180 | 44160 | 36590 | | |
| | | | | | P | | | | | | 7,18 | 8,10 | 8,72 | 9,04 | | |
| | | 5 | -- | (39,7) | Q | | | | | 70130 | 58970 | 49110 | 40600 | 33460 | | |
| | | | | | P | | | | | 7,94 | 8,99 | 9,72 | 10,16 | 10,30 | | |
| | | 10 | -- | (45,0) | Q | | | 89020 | 76340 | 64710 | 54230 | 44980 | 36990 | 30310 | | |
| | | | | | P | | | 7,34 | 8,81 | 9,96 | 10,80 | 11,34 | 11,58 | 11,52 | | |
| | | 15 | -- | (50,9) | Q | | 94370 | 81720 | 69930 | 59110 | 49360 | 40760 | 33340 | 27140 | | |
| | | | | | P | | 8,24 | 9,79 | 11,04 | 11,96 | 12,59 | 12,91 | 12,95 | 12,70 | | |
| | | 20 | -- | (57,3) | Q | 97700 | 85530 | 73960 | 63150 | 53220 | 44280 | 36380 | 29590 | 23920 | | |
| | | | | | P | 9,29 | 10,92 | 12,23 | 13,24 | 13,93 | 14,33 | 14,44 | 14,26 | 13,80 | | |
| | | 25 | -- | (64,3) | Q | 86380 | 75570 | 65260 | 55600 | 46720 | 38710 | 31650 | 25570 | 20510 | | |
| | | | | | P | 12,21 | 13,58 | 14,64 | 15,39 | 15,85 | 16,01 | 15,90 | 15,50 | 14,83 | | |
| | | -- | 30 | 75 | Q | 75900 | 66320 | 57150 | 48530 | 40610 | 33460 | 27160 | 21750 | 17260 | | |
| | | | | | P | 16,09 | 17,09 | 17,80 | 18,21 | 18,33 | 18,18 | 17,75 | 17,05 | 16,09 | | |
| | | -- | 35 | 90 | Q | 70050 | 61060 | 52430 | 44340 | 36900 | 30190 | 24290 | 19250 | | | |
| | | | | | P | 20,69 | 21,24 | 21,51 | 21,50 | 21,21 | 20,66 | 19,85 | 18,79 | | | |
| | | -- | 40 | 100 | Q | 62150 | 54170 | 46470 | 39230 | 32560 | 26550 | 21260 | | | | |
| | | | | | P | 23,36 | 23,65 | 23,66 | 23,40 | 22,88 | 22,10 | 21,08 | | | | |
| | | -- | 45 | 110 | Q | 55370 | 48270 | 41400 | 34900 | 28910 | 23510 | | | | | |
| | | | | | P | 25,82 | 25,88 | 25,67 | 25,19 | 24,47 | 23,50 | | | | | |
| | | -- | 25 | 100 | Q | 89130 | 77290 | 66070 | 55640 | 46120 | 37590 | 30110 | | | | |
| | | | | | P | 23,36 | 23,65 | 23,66 | 23,40 | 22,88 | 22,10 | 21,08 | | | | |
| | | -- | 25 | 120 | Q | 88480 | 76520 | 65220 | 54730 | 45180 | 36660 | | | | | |
| | | | | | P | 28,19 | 28,04 | 27,63 | 26,98 | 26,08 | 24,95 | | | | | |
| | | -- | 25 | 140 | Q | 88070 | 76080 | 64780 | 54320 | | | | | | | |
| | | | | | P | 33,04 | 32,57 | 31,87 | 30,94 | | | | | | | |
| | CD3000M | 0 | -- | (34,9) | Q | | | | | | 71690 | 59730 | 49290 | 40430 | 33150 | 27480 |
| | | | | | P | | | | | | 8,06 | 9,09 | 9,78 | 10,19 | 10,34 | 10,31 |
| | | 5 | -- | (39,7) | Q | | | | | 79500 | 66770 | 55430 | 45560 | 37170 | 30300 | 24940 |
| | | | | | P | | | | | 8,94 | 10,11 | 10,91 | 11,38 | 11,58 | 11,55 | 11,34 |
| | | 10 | -- | (45,0) | Q | | | 101300 | 86860 | 73650 | 61670 | 51010 | 41720 | 33840 | 27390 | 22370 |
| | | | | | P | | | 8,17 | 9,92 | 11,23 | 12,13 | 12,68 | 12,92 | 12,90 | 12,67 | 12,28 |
| | | 15 | -- | (50,9) | Q | | | 93210 | 79850 | 67530 | 56360 | 46410 | 37750 | 30410 | 24410 | 19760 |
| | | | | | P | | | 11,05 | 12,48 | 13,48 | 14,09 | 14,37 | 14,36 | 14,11 | 13,68 | 13,10 |
| | | 20 | -- | (57,3) | Q | | | 84600 | 72320 | 60990 | 50710 | 41560 | 33590 | 26850 | 21340 | |
| | | | | | P | | | 13,88 | 14,97 | 15,64 | 15,96 | 15,95 | 15,69 | 15,20 | 14,55 | |
| | | 25 | -- | (64,3) | Q | | | 74810 | 63820 | 53650 | 44420 | 36200 | 29050 | 23000 | 18070 | |
| | | | | | P | | | 16,65 | 17,38 | 17,71 | 17,70 | 17,41 | 16,87 | 16,13 | 15,26 | |
| | | -- | 30 | 75 | Q | | | 65600 | 55760 | 46640 | 38360 | 30990 | 24580 | 19160 | | |
| | | | | | P | | | 20,26 | 20,46 | 20,30 | 19,85 | 19,13 | 18,21 | 17,13 | | |
| | | -- | 35 | 90 | Q | | | 60030 | 50730 | 42120 | 34290 | 27340 | 21300 | | | |
| | | | | | P | | | 24,42 | 23,94 | 23,16 | 22,12 | 20,88 | 19,49 | | | |
| | | -- | 40 | 100 | Q | | | 52940 | 44590 | 36830 | 29780 | 23520 | | | | |
| | | | | | P | | | 26,81 | 25,91 | 24,75 | 23,37 | 21,81 | | | | |
| | | -- | 45 | 110 | Q | | | 46800 | 39280 | 32280 | 25920 | 20260 | | | | |
| | | | | | P | | | 29,04 | 27,76 | 26,24 | 24,54 | 22,70 | | | | |
| | CD3400H | 0 | -- | (34,9) | Q | | | | | | 72310 | 60450 | 50180 | 41540 | | |
| | | | | | P | | | | | | 8,08 | 9,14 | 9,86 | 10,23 | | |
| | | 5 | -- | (39,7) | Q | | | | | 79770 | 67100 | 55890 | 46190 | 38040 | | |
| | | | | | P | | | | | 8,96 | 10,16 | 11,01 | 11,51 | 11,68 | | |
| | | 10 | -- | (45,0) | Q | | | 101300 | 86860 | 73670 | 61770 | 51250 | 42150 | 34510 | | |
| | | | | | P | | | 8,30 | 9,97 | 11,29 | 12,25 | 12,87 | 13,14 | 13,08 | | |
| | | 15 | -- | (50,9) | Q | | 107400 | 93020 | 79650 | 67370 | 56300 | 46500 | 38040 | 30960 | | |
| | | | | | P | | 9,35 | 11,12 | 12,53 | 13,59 | 14,31 | 14,68 | 14,72 | 14,43 | | |
| | | 20 | -- | (57,3) | Q | 111200 | 97370 | 84260 | 72000 | 60730 | 50560 | 41570 | 33810 | 27320 | | |
| | | | | | P | 10,60 | 12,44 | 13,93 | 15,06 | 15,86 | 16,31 | 16,43 | 16,23 | 15,70 | | |
| | | 25 | -- | (64,3) | Q | 98340 | 86110 | 74420 | 63460 | 53370 | 44260 | 36210 | 29270 | 23470 | | |
| | | | | | P | 13,96 | 15,50 | 16,69 | 17,54 | 18,06 | 18,25 | 18,10 | 17,64 | 16,87 | | |
| | | -- | 30 | 75 | Q | 86500 | 75650 | 65250 | 55470 | 46460 | 38320 | 31130 | 24940 | 19790 | | |
| | | | | | P | 18,42 | 19,54 | 20,33 | 20,78 | 20,91 | 20,72 | 20,22 | 19,41 | 18,29 | | |
| | | -- | 35 | 90 | Q | 79940 | 69740 | 59960 | 50760 | 42280 | 34640 | 27900 | 22120 | | | |
| | | | | | P | 23,70 | 24,30 | 24,57 | 24,53 | 24,19 | 23,54 | 22,59 | 21,35 | | | |
| | | -- | 40 | 100 | Q | 70970 | 61910 | 53180 | 44940 | 37340 | 30480 | 24440 | | | | |
| | | | | | P | 26,74 | 27,03 | 27,01 | 26,69 | 26,06 | 25,15 | 23,95 | | | | |
| | | -- | 45 | 110 | Q | 63260 | 55200 | 47390 | 40000 | 33170 | 27010 | | | | | |
| | | | | | P | 29,53 | 29,55 | 29,27 | 28,69 | 27,83 | 26,68 | | | | | |
| | | -- | 25 | 100 | Q | 101800 | 88340 | 75600 | 63740 | 52890 | 43150 | 34610 | | | | |
| | | | | | P | 26,74 | 27,03 | 27,01 | 26,69 | 26,06 | 25,15 | 23,95 | | | | |
| | | -- | 25 | 120 | Q | 101200 | 87530 | 74680 | 62740 | 51840 | 42090 | | | | | |
| | | | | | P | 32,19 | 31,97 | 31,46 | 30,66 | 29,59 | 28,25 | | | | | |
| | | -- | 25 | 140 | Q | 100700 | 87020 | 74150 | 62220 | | | | | | | |
| | | | | | P | 37,56 | 36,97 | 36,10 | 34,97 | | | | | | | |

- Funzionamento a 50 Hz
- Per funzionamento a 60 Hz, moltiplicare la resa per 1,18
- Le prestazioni si basano sulla norma europea EN12900
- Non miscelare mai olii estere con olii differenti

- Frequency rate 50 Hz
- For 60 Hz operation, data to be multiplied by 1,18
- Performance data are based on European Standard EN12900
- Never mix ester oils with different oils

- Fonctionnement à 50 Hz
- Pour le fonctionnement à 60 Hz, multiplier le rendement par 1,18
- Les données de puissance se basent sur la norme européenne EN 12900
- Ne mélanger jamais ester huiles avec different huiles

- Frequenz 50 Hz
- Für 60 Hz-Betrieb ist die Leistung mit 1,18 zu multiplizieren
- Leistungswerte basieren auf der europäischen Norm EN 12900
- Niemals Esteröl mit anderen Ölen vermischen

OFFICINE MARIO DORIN SINCE 1918
DORIN INNOVATION

# R744
# CO2
# (CD-M)
# (CD-H)

| Serie Range Serie Serie | Modello Model Modèle Typ | Condizioni operative Operating conditions Conditions d'utilisation Betriebsbedingungen | | | | Q [W] | | Capacità frigorifera Refrigerating capacity Puissance frigorifique Kälteleistung | | | P [kW] | | Potenza assorbita Power input Puissance absorbée Leistungsaufnahme | | | |
|---|---|---|---|---|---|---|---|---|---|---|---|---|---|---|---|---|
| | | Tc | Tgcout | pc | | Temperatura evaporazione / Evaporating temperature Température d'évaporation / Verdampfungstemperatur [°C] | | | | | | | | | | |
| | | [°C] | [°C] | [bar] | | +10 | +5 | 0 | -5 | -10 | -15 | -20 | -25 | -30 | -35 | -40 |
| CD400 | CD3500H | 0 | -- | (34,9) | Q | | | | | | 81860 | 68510 | 56970 | 47270 | | |
| | | | | | P | | | | | | 9,24 | 10,44 | 11,25 | 11,67 | | |
| | | 5 | -- | (39,7) | Q | | | | | 90150 | 75890 | 63280 | 52380 | 43230 | | |
| | | | | | P | | | | | 10,22 | 11,57 | 12,53 | 13,10 | 13,29 | | |
| | | 10 | -- | (45,0) | Q | | | 114300 | 98070 | 83210 | 69810 | 57970 | 47740 | 39170 | | |
| | | | | | P | | | 9,43 | 11,32 | 12,81 | 13,91 | 14,61 | 14,93 | 14,88 | | |
| | | 15 | -- | (50,9) | Q | | 121100 | 105000 | 89870 | 76040 | 63570 | 52550 | 43040 | 35080 | | |
| | | | | | P | | 10,58 | 12,59 | 14,19 | 15,40 | 16,22 | 16,65 | 16,71 | 16,40 | | |
| | | 20 | -- | (57,3) | Q | 125400 | 109800 | 95010 | 81200 | 68500 | 57050 | 46930 | 38200 | 30910 | | |
| | | | | | P | 11,93 | 14,03 | 15,73 | 17,04 | 17,95 | 18,48 | 18,64 | 18,42 | 17,84 | | |
| | | 25 | -- | (64,3) | Q | 110900 | 97060 | 83880 | 71530 | 60160 | 49910 | 40840 | 33030 | 26520 | | |
| | | | | | P | 15,69 | 17,47 | 18,85 | 19,84 | 20,45 | 20,68 | 20,54 | 20,05 | 19,20 | | |
| | | -- | 30 | 75 | Q | 97500 | 85260 | 73520 | 62500 | 52340 | 43170 | 35070 | 28110 | 22310 | | |
| | | | | | P | 20,72 | 22,04 | 22,97 | 23,52 | 23,71 | 23,53 | 22,99 | 22,10 | 20,87 | | |
| | | -- | 35 | 90 | Q | 90100 | 78600 | 67560 | 57180 | 47630 | 39010 | 31420 | 24910 | | | |
| | | | | | P | 26,76 | 27,50 | 27,87 | 27,88 | 27,54 | 26,85 | 25,82 | 24,46 | | | |
| | | -- | 40 | 100 | Q | 80020 | 69800 | 59940 | 50640 | 42070 | 34340 | 27530 | | | | |
| | | | | | P | 30,29 | 30,70 | 30,75 | 30,44 | 29,80 | 28,82 | 27,51 | | | | |
| | | -- | 45 | 110 | Q | 71360 | 62260 | 53450 | 45110 | 37410 | 30450 | | | | | |
| | | | | | P | 33,60 | 33,71 | 33,47 | 32,89 | 31,98 | 30,74 | | | | | |
| | | -- | 25 | 100 | Q | 114800 | 99590 | 85210 | 71830 | 59590 | 48620 | 38990 | | | | |
| | | | | | P | 30,29 | 30,70 | 30,75 | 30,44 | 29,80 | 28,82 | 27,51 | | | | |
| | | -- | 25 | 120 | Q | 114200 | 98810 | 84300 | 70820 | 58530 | 47530 | | | | | |
| | | | | | P | 36,80 | 36,65 | 36,16 | 35,35 | 34,21 | 32,76 | | | | | |
| | | -- | 25 | 140 | Q | 113900 | 98470 | 83940 | 70470 | | | | | | | |
| | | | | | P | 43,45 | 42,89 | 42,02 | 40,84 | | | | | | | |
| | CD3500M | 0 | -- | (34,9) | Q | | | | | | 93100 | 77710 | 64270 | 52850 | 43450 | 36090 |
| | | | | | P | | | | | | 10,90 | 12,24 | 13,15 | 13,68 | 13,90 | 13,86 |
| | | 5 | -- | (39,7) | Q | | | | | 103300 | 86830 | 72240 | 59510 | 48680 | 39790 | 32830 |
| | | | | | P | | | | | 12,11 | 13,62 | 14,65 | 15,28 | 15,55 | 15,52 | 15,26 |
| | | 10 | -- | (45,0) | Q | | | 131200 | 112800 | 95770 | 80340 | 66600 | 54610 | 44420 | 36050 | 29520 |
| | | | | | P | | | 11,23 | 13,47 | 15,14 | 16,30 | 17,01 | 17,33 | 17,32 | 17,04 | 16,55 |
| | | 15 | -- | (50,9) | Q | | | 121100 | 103900 | 87950 | 73550 | 60720 | 49520 | 40010 | 32210 | 26130 |
| | | | | | P | | | 15,02 | 16,84 | 18,11 | 18,91 | 19,27 | 19,28 | 18,97 | 18,42 | 17,68 |
| | | 20 | -- | (57,3) | Q | | | 110000 | 94190 | 79580 | 66310 | 54480 | 44160 | 35400 | 28220 | |
| | | | | | P | | | 18,77 | 20,14 | 21,00 | 21,40 | 21,40 | 21,07 | 20,45 | 19,62 | |
| | | 25 | -- | (64,3) | Q | | | 97420 | 83250 | 70130 | 58200 | 47550 | 38270 | 30400 | 23960 | |
| | | | | | P | | | 22,44 | 23,34 | 23,76 | 23,75 | 23,37 | 22,68 | 21,74 | 20,61 | |
| | | -- | 30 | 75 | Q | | | 85620 | 72910 | 61130 | 50400 | 40830 | 32480 | 25420 | | |
| | | | | | P | | | 27,24 | 27,46 | 27,24 | 26,64 | 25,72 | 24,53 | 23,13 | | |
| | | -- | 35 | 90 | Q | | | 78580 | 66540 | 55370 | 45200 | 36140 | 28260 | | | |
| | | | | | P | | | 32,82 | 32,15 | 31,11 | 29,74 | 28,12 | 26,29 | | | |
| | | -- | 40 | 100 | Q | | | 69420 | 58580 | 48510 | 39330 | 31150 | | | | |
| | | | | | P | | | 36,02 | 34,81 | 33,26 | 31,43 | 29,38 | | | | |
| | | -- | 45 | 110 | Q | | | 61450 | 51680 | 42580 | 34270 | 26870 | | | | |
| | | | | | P | | | 39,01 | 37,28 | 35,26 | 33,01 | 30,57 | | | | |
| | CD4000H | 0 | -- | (34,9) | Q | | | | | | 93790 | 78490 | 65240 | 54090 | | |
| | | | | | P | | | | | | 10,72 | 12,07 | 12,97 | 13,42 | | |
| | | 5 | -- | (39,7) | Q | | | | | 103200 | 86860 | 72400 | 59900 | 49390 | | |
| | | | | | P | | | | | 11,88 | 13,39 | 14,46 | 15,08 | 15,25 | | |
| | | 10 | -- | (45,0) | Q | | | 130700 | 112200 | 95140 | 79800 | 66240 | 54510 | 44670 | | |
| | | | | | P | | | 11,05 | 13,18 | 14,85 | 16,06 | 16,82 | 17,14 | 17,04 | | |
| | | 15 | -- | (50,9) | Q | | 138400 | 119900 | 102700 | 86850 | 72580 | 59960 | 49070 | 39940 | | |
| | | | | | P | | 12,43 | 14,68 | 16,47 | 17,80 | 18,68 | 19,13 | 19,14 | 18,73 | | |
| | | 20 | -- | (57,3) | Q | 143100 | 125400 | 108500 | 92650 | 78140 | 65050 | 53480 | 43500 | 35150 | | |
| | | | | | P | 14,04 | 16,39 | 18,28 | 19,71 | 20,69 | 21,23 | 21,34 | 21,04 | 20,32 | | |
| | | 25 | -- | (64,3) | Q | 126500 | 110700 | 95650 | 81540 | 68560 | 56840 | 46490 | 37560 | 30110 | | |
| | | | | | P | 18,36 | 20,32 | 21,82 | 22,87 | 23,49 | 23,68 | 23,46 | 22,82 | 21,78 | | |
| | | -- | 30 | 75 | Q | 111100 | 97120 | 83740 | 71160 | 59570 | 49110 | 39870 | 31930 | 25310 | | |
| | | | | | P | 24,10 | 25,50 | 26,47 | 27,00 | 27,11 | 26,82 | 26,12 | 25,02 | 23,54 | | |
| | | -- | 35 | 90 | Q | 102600 | 89440 | 76860 | 65040 | 54160 | 44350 | 35700 | 28290 | | | |
| | | | | | P | 30,91 | 31,62 | 31,91 | 31,80 | 31,29 | 30,39 | 29,11 | 27,46 | | | |
| | | -- | 40 | 100 | Q | 91030 | 79390 | 68170 | 57600 | 47850 | 39050 | 31310 | | | | |
| | | | | | P | 34,85 | 35,15 | 35,06 | 34,57 | 33,70 | 32,46 | 30,85 | | | | |
| | | -- | 45 | 110 | Q | 81170 | 70820 | 60800 | 51320 | 42570 | 34670 | | | | | |
| | | | | | P | 38,50 | 38,44 | 38,00 | 37,19 | 36,00 | 34,46 | | | | | |
| | | -- | 25 | 100 | Q | 130600 | 113300 | 96930 | 81700 | 67770 | 55290 | 44340 | | | | |
| | | | | | P | 34,85 | 35,15 | 35,06 | 34,57 | 33,70 | 32,46 | 30,85 | | | | |
| | | -- | 25 | 120 | Q | 129900 | 112500 | 95950 | 80640 | 66690 | 54210 | | | | | |
| | | | | | P | 42,01 | 41,64 | 40,90 | 39,80 | 38,35 | 36,55 | | | | | |
| | | -- | 25 | 140 | Q | | 112300 | 95760 | 80490 | | | | | | | |
| | | | | | P | | 48,39 | 47,18 | 45,65 | | | | | | | |
| | CD5000M | 0 | -- | (34,9) | Q | | | | | | 106000 | 88420 | 73150 | 60150 | 49450 | 41060 |
| | | | | | P | | | | | | 12,05 | 13,65 | 14,74 | 15,4 | 15,7 | 15,69 |
| | | 5 | -- | (39,7) | Q | | | | | 117500 | 98800 | 82220 | 67730 | 55410 | 45280 | 37350 |
| | | | | | P | | | | | 13,36 | 15,17 | 16,42 | 17,20 | 17,56 | 17,57 | 17,31 |
| | | 10 | -- | (45,0) | Q | | | 149300 | 128300 | 109000 | 91430 | 75800 | 62150 | 50550 | 41020 | 33560 |
| | | | | | P | | | 12,14 | 14,82 | 16,83 | 18,25 | 19,14 | 19,57 | 19,61 | 19,33 | 18,80 |
| | | 15 | -- | (50,9) | Q | | | 137700 | 118200 | 100100 | 83710 | 69110 | 56360 | 45530 | 36640 | 29690 |
| | | | | | P | | | 16,47 | 18,68 | 20,25 | 21,25 | 21,75 | 21,82 | 21,52 | 20,93 | 20,11 |
| | | 20 | -- | (57,3) | Q | | | 125200 | 107200 | 90570 | 75470 | 62010 | 50260 | 40270 | 32090 | |
| | | | | | P | | | 20,75 | 22,46 | 23,56 | 24,12 | 24,20 | 23,89 | 23,24 | 22,32 | |
| | | 25 | -- | (64,3) | Q | | | 110900 | 94750 | 79820 | 66240 | 54120 | 43550 | 34570 | 27220 | |
| | | | | | P | | | 24,95 | 26,13 | 26,73 | 26,82 | 26,47 | 25,75 | 24,73 | 23,48 | |
| | | -- | 30 | 75 | Q | | | 97460 | 83000 | 69580 | 57360 | 46460 | 36940 | 28880 | | |
| | | | | | P | | | 30,44 | 30,85 | 30,74 | 30,16 | 29,19 | 27,9 | 26,36 | | |
| | | -- | 35 | 90 | Q | | | 89450 | 75740 | 63020 | 51430 | 41100 | 32100 | | | |
| | | | | | P | | | 36,81 | 36,23 | 35,18 | 33,74 | 31,98 | 29,96 | | | |
| | | -- | 40 | 100 | Q | | | 79020 | 66680 | 55190 | 44730 | 35390 | | | | |
| | | | | | P | | | 40,48 | 39,28 | 37,66 | 35,69 | 33,44 | | | | |
| | | -- | 45 | 110 | Q | | | 69950 | 58810 | 48430 | 38960 | 30500 | | | | |
| | | | | | P | | | 43,90 | 42,12 | 39,97 | 37,51 | 34,82 | | | | |

- Funzionamento a 50 Hz
- Per funzionamento a 60 Hz, moltiplicare la resa per 1,18
- Le prestazioni si basano sulla norma europea EN12900
- Non miscelare mai olii estere con olii differenti

- Frequency rate 50 Hz
- For 60 Hz operation, data to be multiplied by 1,18
- Performance data are based on European Standard EN12900
- Never mix ester oils with different oils

- Fonctionnement à 50 Hz
- Pour le fonctionnement à 60 Hz, multiplier le rendement par 1,18
- Les données de puissance se basent sur la norme européenne EN 12900
- Ne mélanger jamais ester huiles avec different huiles

- Frequenz 50 Hz
- Für 60 Hz-Betrieb ist die Leistung mit 1,18 zu multiplizieren
- Leistungswerte basieren auf der europäischen Norm EN 12900
- Niemals Esteröl mit anderen Ölen vermischen

## *Figura / Figure / Figure / Abbildung I* **CD 200**

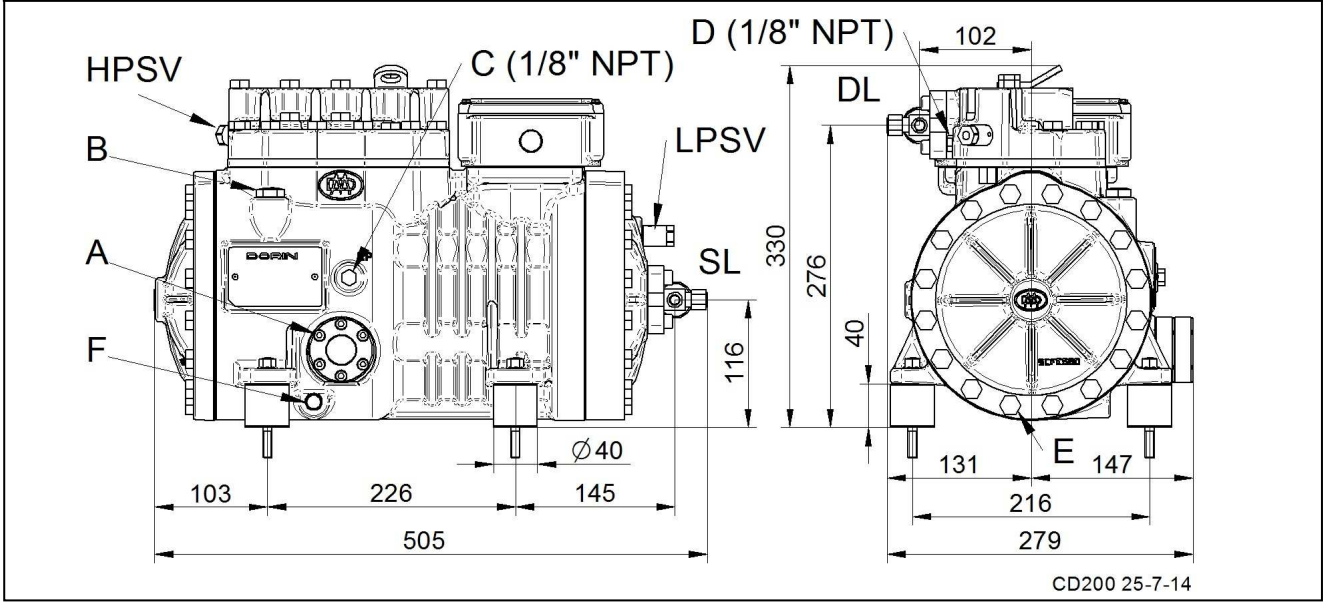


| | | | |
|---|---|---|---|
| A - Spia olio<br>B - Tappo carica olio (M12)<br>C - Presa LP (1/8" NPT)<br>D - Presa HP (1/8" NPT)<br>E - Tappo scarica olio<br>F - Resistenza carter<br>DL - Rubinetto compress.<br>SL - Rubinetto aspiraz.<br>LPSV - Valvola sic. LP<br>HPSV - Valvola sic. HP | A - Oil sight<br>B - Oil charge plug (M12)<br>C - LP tap (1/8" NPT)<br>D - HP tap (1/8" NPT)<br>E - Oil drain plug<br>F - Crankcase heater<br>DL - Discharge serv. valve<br>SL - Suction serv. valve<br>LPSV - LP safety valve<br>HPSV - HP safety valve | A - Voyant d´huile<br>B – Bouchon ch. huile (M12)<br>C - Prise LP (1/8" NPT)<br>D - Prise HP (1/8" NPT)<br>E - Bouchon vidage huile<br>F - Resistance carter<br>DL - Vanne de refoulement<br>SL - Vanne aspiration<br>LPSV – Vanne securitè LP<br>HPSV – Vanne securitè HP | A – Ölschauglas<br>B – Ölfüllstopfen (M12)<br>C – Anschluss LP (1/8" NPT)<br>D – Anschluss HP (1/8" NPT)<br>E – Ölablaß<br>F – Ölsumpfheizung<br>DL – Druckabsperrventil<br>SL – Saugabsperrventil<br>LPSV – Sicherheitsventil LP<br>HPSV – Sicherheitsventil HP |

| Serie<br>Range<br>Serie<br>Serie | Modello<br>Model<br>Modèle<br>Typ | Figura<br>Figure<br>Figure<br>Abbildung |
|---|---|---|
| CD 200 | CD 150M | I |
| | CD 180H | I |
| | CD 180M | I |
| | CD 300H | I |
| | CD 300M | I |
| | CD 350H | I |
| | CD 350M | I |
| | CD 360H | I |
| | CD 360M | I |
| | CD 380H | I |

## *Figura / Figure / Figure / Abbildung II* **CD 300**

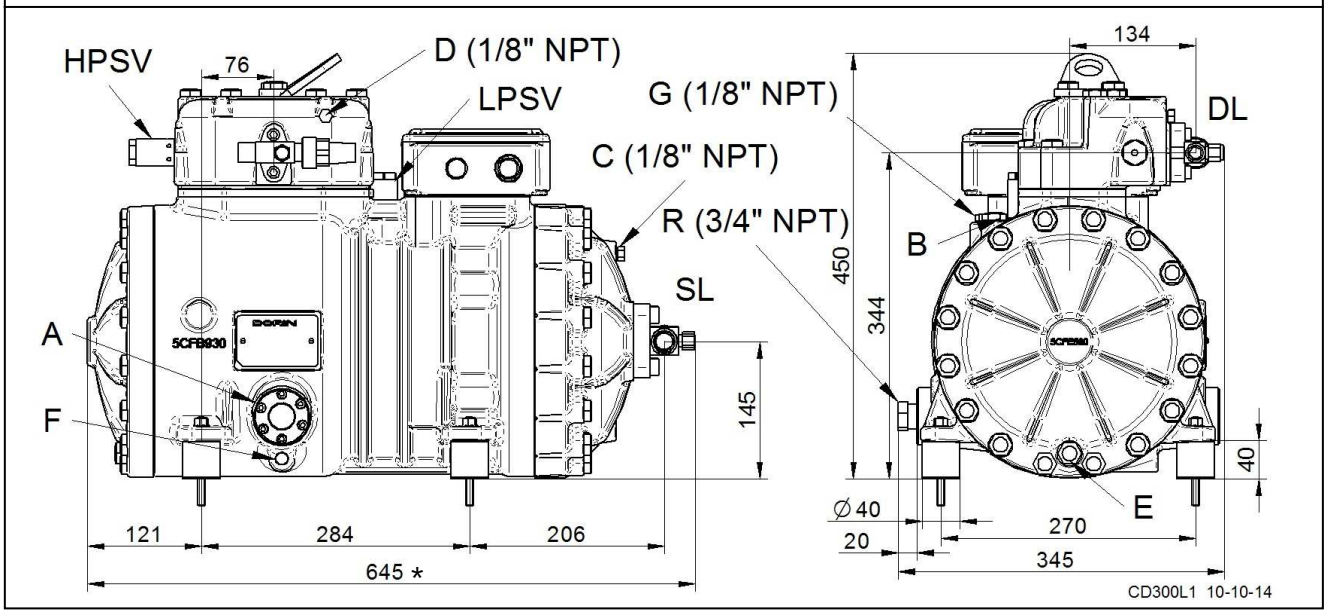


## *Figura / Figure / Figure / Abbildung III* **CD 300**

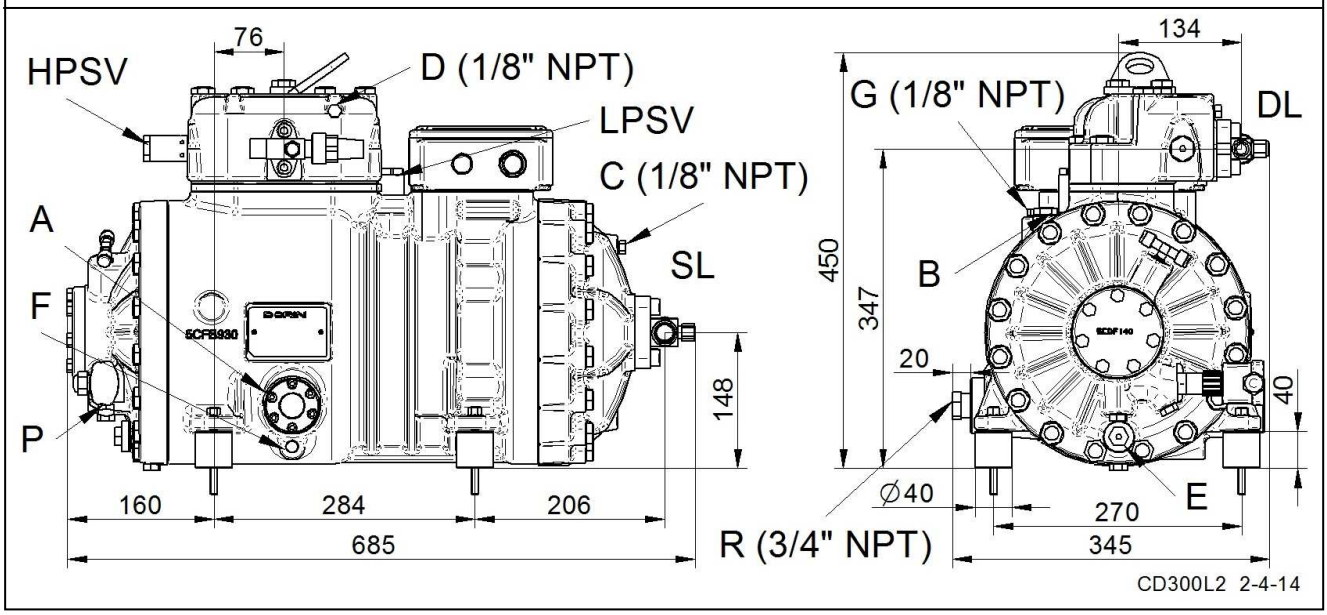


| | | | |
|---|---|---|---|
| A - Spia olio<br>B - Tappo carica olio (M12)<br>C - Presa LP (1/8" NPT)<br>D - Presa HP (1/8" NPT)<br>E - Tappo scarica olio<br>F - Resistenza carter<br>G – Tappo ritorno olio<br>P - Press. diff. olio elettr.<br>R – Connessione livello olio<br>DL - Rubinetto compress.<br>SL - Rubinetto aspiraz.<br>LPSV - Valvola sic. LP<br>HPSV - Valvola sic. HP<br>* Per questi modelli, la figura III (con L=685 mm) diventa la figura di riferimento se la pompa olio è richiesta come accessorio | A - Oil sight<br>B - Oil charge plug (M12)<br>C - LP tap (1/8" NPT)<br>D - HP tap (1/8" NPT)<br>E - Oil drain plug<br>F - Crankcase heater<br>G – Oil return plug<br>P - Oil diff. press. Switch<br>R – Oil level connection<br>DL - Discharge serv. valve<br>SL - Suction serv. valve<br>LPSV - LP safety valve<br>HPSV - HP safety valve<br>* For this models, figure III (with L = 685 mm) becomes the reference figure if the oil pump is requested as accessory | A - Voyant d´huile<br>B – Bouchon ch. huile (M12)<br>C - Prise LP (1/8" NPT)<br>D - Prise HP (1/8" NPT)<br>E - Bouchon vidage huile<br>F - Resistance carter<br>G – Retour d'huile<br>P – Pressostat diff. Huile<br>R - Connexion niveau d'huile<br>DL - Vanne de refoulement<br>SL - Vanne aspiration<br>LPSV – Vanne securitè LP<br>HPSV – Vanne securitè HP<br>* Pour ces modèles, figure III (L = 685 mm) devient la figure de référence si la pompe à huile est demandé comme accessoire | A – Ölschauglas<br>B – Ölfüllstopfen (M12)<br>C – Anschluss LP (1/8" NPT)<br>D – Anschluss HP (1/8" NPT)<br>E – Ölablaß<br>F – Ölsumpfheizung<br>G - Ölrückführung<br>P – Öldruckdifferenzschalter<br>R - Ölstand-Verbindung<br>DL – Druckabsperrventil<br>SL – Saugabsperrventil<br>LPSV – Sicherheitsventil LP<br>HPSV – Sicherheitsventil HP<br>* Wenn für dieses Modell die Ölpumpenschmierung als Zubehör eingesetzt wird entspricht der Verdichter der Abbildung III und hat eine Länge von L= 685 mm |

| Serie<br>Range<br>Serie<br>Serie | Modello<br>Model<br>Modèle<br>Typ | Figura<br>Figure<br>Figure<br>Abbildung | L<br>[mm] |
|---|---|---|---|
| CD 300 | CD 700H | II | 645 |
| | CD 700M | II | 645 |
| | CD 750H | II | 645 |
| | CD 750M | II | 645 |
| | CD 1000H | II | 645 |
| | CD 750B * | II * | 645 * |
| | CD 1000M * | II * | 645 * |
| | CD 1200H * | II * | 645 * |
| | CD 800B | III | 685 |
| | CD 1100M | III | 685 |
| | CD 1300H | III | 685 |
| | CD 1300M | III | 685 |
| | CD 1500H | III | 685 |
| | CD 1000B | III | 685 |
| | CD 1400M | III | 685 |
| | CD 1900H | III | 685 |

## *Figura / Figure / Figure / Abbildung IV* **CD 400**

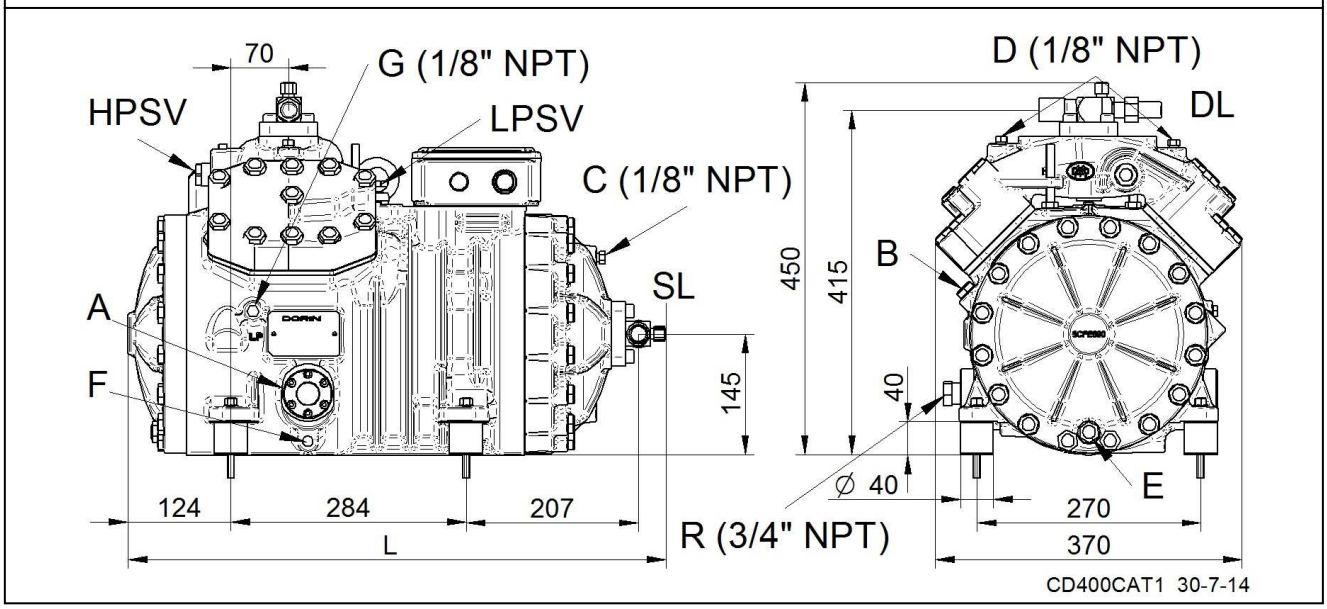


## *Figura / Figure / Figure / Abbildung V* **CD 400**

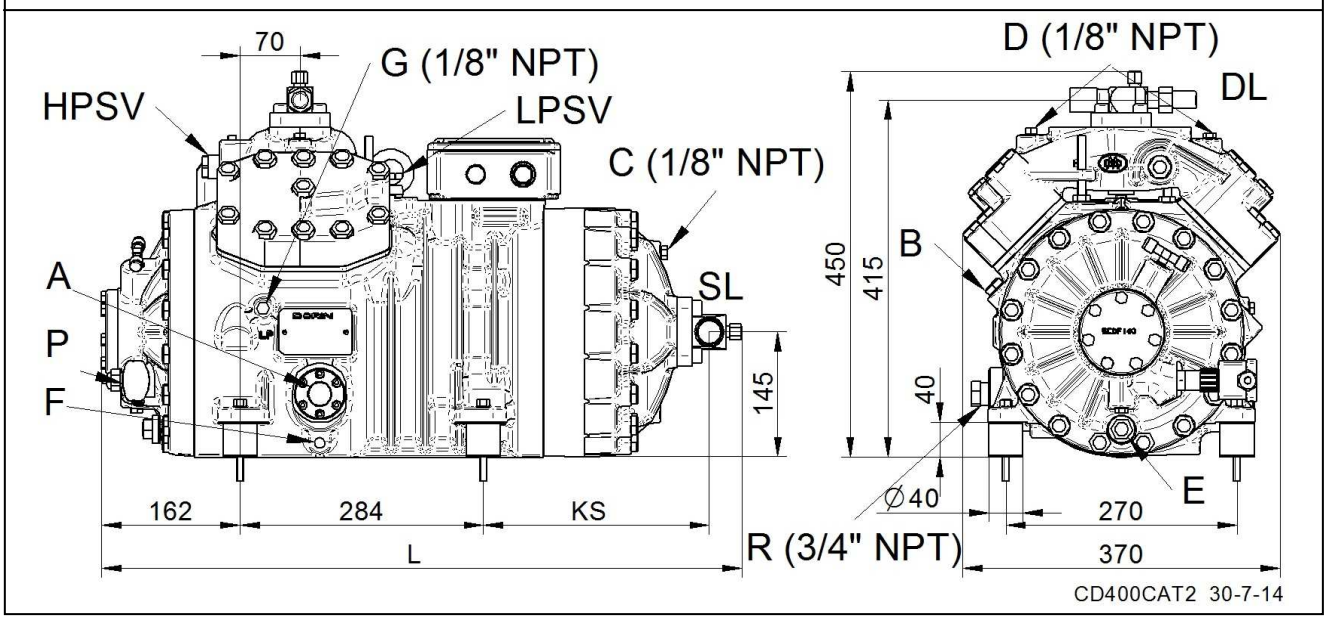


| | | | |
|---|---|---|---|
| A - Spia olio<br>B - Tappo carica olio (M12)<br>C - Presa LP (1/8" NPT)<br>D - Presa HP (1/8" NPT)<br>E - Tappo scarica olio<br>F - Resistenza carter<br>G – Tappo ritorno olio<br>P - Press. diff. olio elettr.<br>R – Connessione livello olio<br>DL - Rubinetto compress.<br>SL - Rubinetto aspiraz.<br>LPSV - Valvola sic. LP<br>HPSV - Valvola sic. HP | A - Oil sight<br>B - Oil charge plug (M12)<br>C - LP tap (1/8" NPT)<br>D - HP tap (1/8" NPT)<br>E - Oil drain plug<br>F - Crankcase heater<br>G – Oil return plug<br>P - Oil diff. press. Switch<br>R – Oil level connection<br>DL - Discharge serv. valve<br>SL - Suction serv. valve<br>LPSV - LP safety valve<br>HPSV - HP safety valve | A - Voyant d´huile<br>B – Bouchon ch. huile (M12)<br>C - Prise LP (1/8" NPT)<br>D - Prise HP (1/8" NPT)<br>E - Bouchon vidage huile<br>F - Resistance carter<br>G – Retour d'huile<br>P – Pressostat diff. Huile<br>R - Connexion niveau d'huile<br>DL - Vanne de refoulement<br>SL - Vanne aspiration<br>LPSV – Vanne securitè LP<br>HPSV – Vanne securitè HP | A – Ölschauglas<br>B – Ölfüllstopfen (M12)<br>C – Anschluss LP (1/8" NPT)<br>D – Anschluss HP (1/8" NPT)<br>E – Ölablaß<br>F – Ölsumpfheizung<br>G - Ölrückführung<br>P – Öldruckdifferenzschalter<br>R - Ölstand-Verbindung<br>DL – Druckabsperrventil<br>SL – Saugabsperrventil<br>LPSV – Sicherheitsventil LP<br>HPSV – Sicherheitsventil HP |
| * Per questi modelli, la figura V (con L=690 mm) diventa la figura di riferimento se la pompa olio è richiesta come accessorio | * For this models, figure V (with L = 690 mm) becomes the reference figure if the oil pump is requested as accessory | * Pour ces modèles, la figure V (L = 690 mm) devient la figure de référence si la pompe à huile est demandé comme accessoire | * Wenn für dieses Modell die Ölpumpenschmierung als Zubehör eingesetzt wird entspricht der Verdichter der Abbildung V und hat eine Länge von L= 690 mm |

| Serie<br>Range<br>Serie<br>Serie | Modello<br>Model<br>Modèle<br>Typ | Figura<br>Figure<br>Figure<br>Abbildung | L<br>[mm] | KS<br>[mm] |
|---|---|---|---|---|
| CD 400 | CD 1200M | IV | 650 | --- |
| | CD 1400H | IV | 650 | --- |
| | CD 1500M * | IV * | 650 * | --- |
| | CD 2000H * | IV * | 650 * | --- |
| | CD 1200B * | IV * | 650 * | --- |
| | CD 2000M * | IV * | 650 * | --- |
| | CD 2400H * | IV * | 650 * | --- |
| | CD 1500B * | IV * | 650 * | --- |
| | CD 2500H * | IV * | 650 * | --- |
| | CD 2500M | V | 690 | 208 |
| | CD 3000H | V | 740 | 259 |
| | CD 2000B | V | 690 | 208 |
| | CD 3000M | V | 740 | 259 |
| | CD 3400H | V | 740 | 259 |
| | CD 2500B | V | 690 | 208 |
| | CD 3500H | V | 740 | 259 |
| | CD 3000B | V | 740 | 259 |
| | CD 3500M | V | 740 | 259 |
| | CD 4000H | V | 780 | 300 |
| | CD 3500B | V | 750 | 264 |
| | CD 5000M | V | 790 | 305 |

## *Figura / Figure / Figure / Abbildung VI* **CD2S-200**

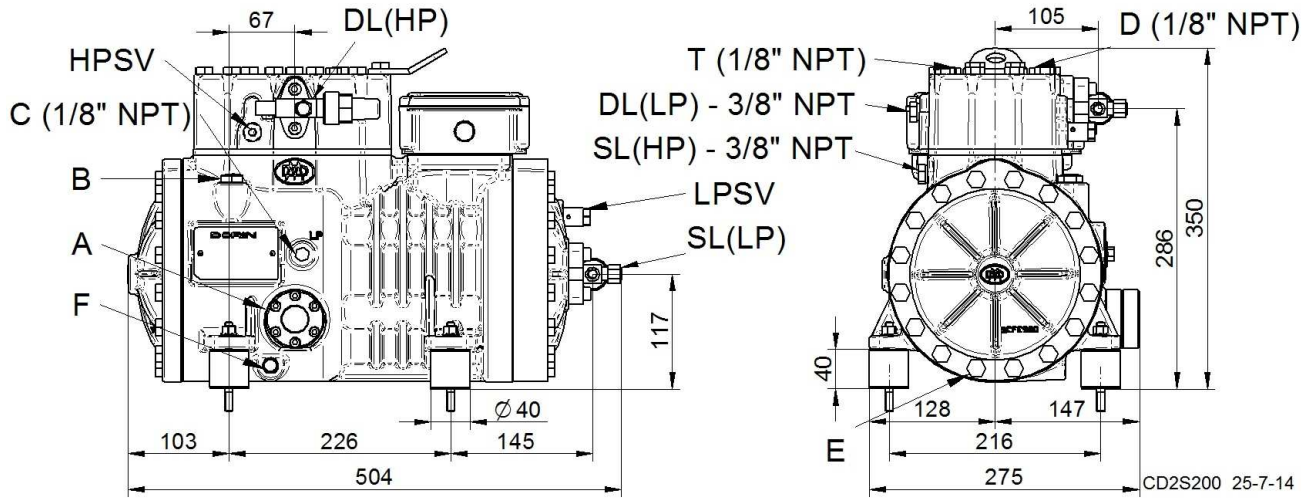


## *Figura / Figure / Figure / Abbildung VII* **CD2S-400**

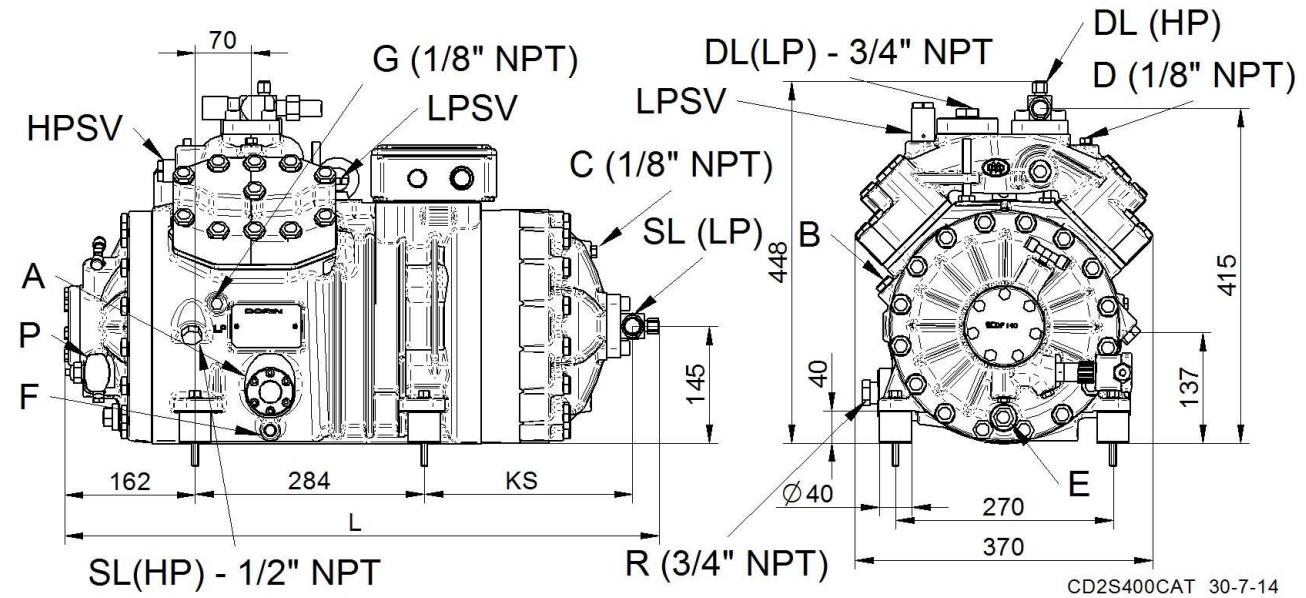


| | | | |
|---|---|---|---|
| A - Spia olio | A - Oil sight | A - Voyant d´huile | A – Ölschauglas |
| B - Tappo carica olio (M12) | B - Oil charge plug (M12) | B – Bouchon ch. huile (M12) | B – Ölfüllstopfen (M12) |
| C - Presa LP (1/8" NPT) | C - LP tap (1/8" NPT) | C - Prise LP (1/8" NPT) | C – Anschluss LP (1/8" NPT) |
| D - Presa HP (1/8" NPT) | D - HP tap (1/8" NPT) | D - Prise HP (1/8" NPT) | D – Anschluss HP (1/8" NPT) |
| E - Tappo scarica olio | E - Oil drain plug | E - Bouchon vidage huile | E – Ölablaß |
| F - Resistenza carter | F - Crankcase heater | F - Resistance carter | F – Ölsumpfheizung |
| G – Tappo ritorno olio | G – Oil return plug | G – Retour d'huile | G - Ölrückführung |
| P - Press. diff. olio elettr. | P - Oil diff. press. Switch | P – Pressostat diff. Huile | P – Öldruckdifferenzschalter |
| R – Connessione livello olio | R – Oil level connection | R - Connexion niveau d'huile | R - Ölstand-Verbindung |
| T - Presa press. interm. (1/8" NPT) | T - Intermediate pressure tap (1/8" NPT) | T – Prise pression moyenne (1/8" NPT) | T – Anschluss Zwischendruckst. (1/8" NPT) |
| DL(LP) - Connessione compr. 1° stadio | DL(LP) - 1° stage discharge tap | DL(LP) – Connexion de refoulement 1° stade | DL(LP) - Druckanschluss 1° stufiges |
| SL(LP) - Rubinetto aspir. 1° stadio | SL(LP) - 1° stage suction service valve | SL(LP) - Vanne aspiration 1° stade | SL(LP) - Saugabsperrventil 1° stufiges |
| DL(HP) - Rubinetto compr. 2° stadio | DL(HP) - 2° stage discharge service valve | DL(HP) – Vanne refoulement 2° stade | DL(HP) - Druckabsperrventil 2° stufiges |
| SL(HP) - Connessione aspir. 2° stadio | SL(HP) - 2° stage suction tap | SL(HP) – Connexion d'aspiration 2° stade | SL(HP) - Sauganschluss 2° stufiges |
| LPSV - Valvola sic. LP | LPSV - LP safety valve | LPSV – Soup. de sécurité LP | LPSV – Sicherheitsventil LP |
| HPSV - Valvola sic. HP | HPSV - HP safety valve | HPSV – Soup. de sécurité HP | HPSV – Sicherheitsventil HP |

| Serie<br>Range<br>Serie<br>Serie | Modello<br>Model<br>Modèle<br>Typ | Figura<br>Figure<br>Figure<br>Abbildung |
|---|---|---|
| CD2S-200 | CD2S300 | VI |
| | CD2S350 | VI |
| | CD2S360 | VI |

| Serie<br>Range<br>Serie<br>Serie | Modello<br>Model<br>Modèle<br>Typ | Figura<br>Figure<br>Figure<br>Abbildung | L<br>[mm] | KS<br>[mm] |
|---|---|---|---|---|
| CD2S-400 | CD2S1200 | VII | 690 | 208 |
| | CD2S1500 | VII | 690 | 208 |
| | CD2S2000 | VII | 690 | 208 |
| | CD2S2500 | VII | 690 | 208 |
| | CD2S3000 | VII | 740 | 259 |
| | CD2S3500 | VII | 740 | 259 |

**OFFICINE MARIO DORIN S.p.A.**
Via Aretina 388, 50061 Compiobbi - Florence, Italy
Tel. +39 055 62321 1 - Fax +39 055 62321 380

**dorin@dorin.com**
**www.dorin.com**